Controlling an electronic expansion valve (Stepper-type) using the **AKO-16526 / AKO-16526A V2** controller

The AKO-16526 / AKO-16526A controller can be used to control a PWM-type electronic expansion valve directly; an external driver must be used to control a Stepper-type valve.
The controller tells the driver which opening should be applied to the EEV according to the pressure and temperature at the evaporator outlet, in order to obtain the superheating value defined in parameter Sh. An optimum superheating value increases the efficiency of the evaporator.

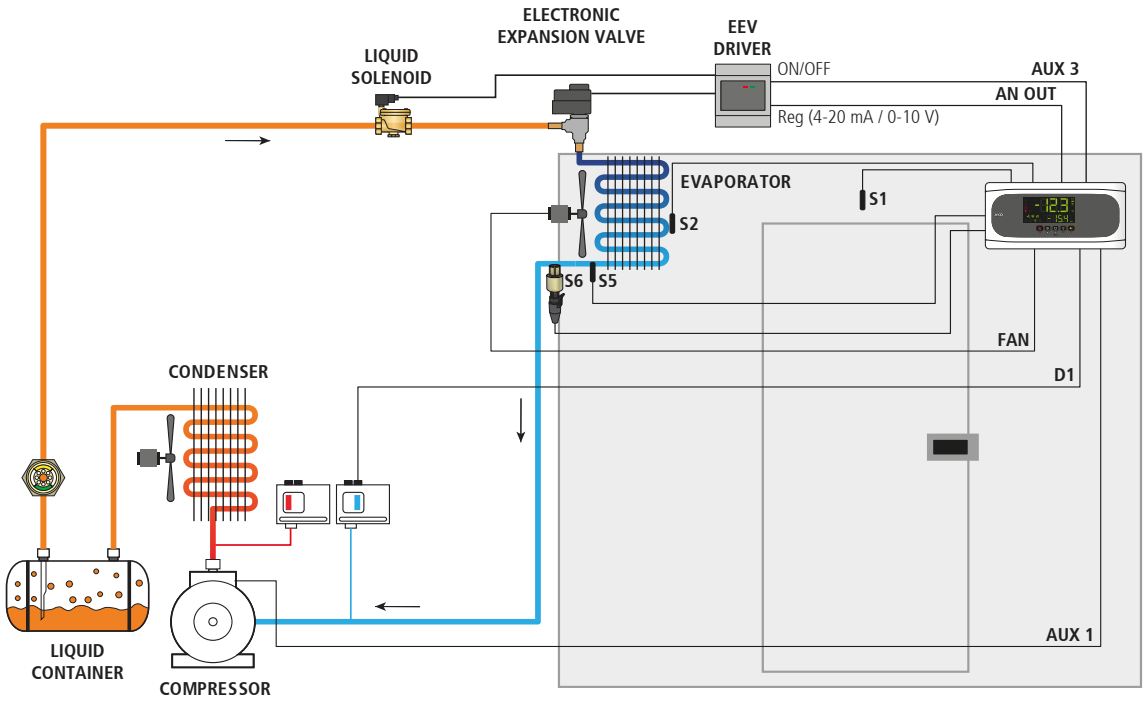

Wiring

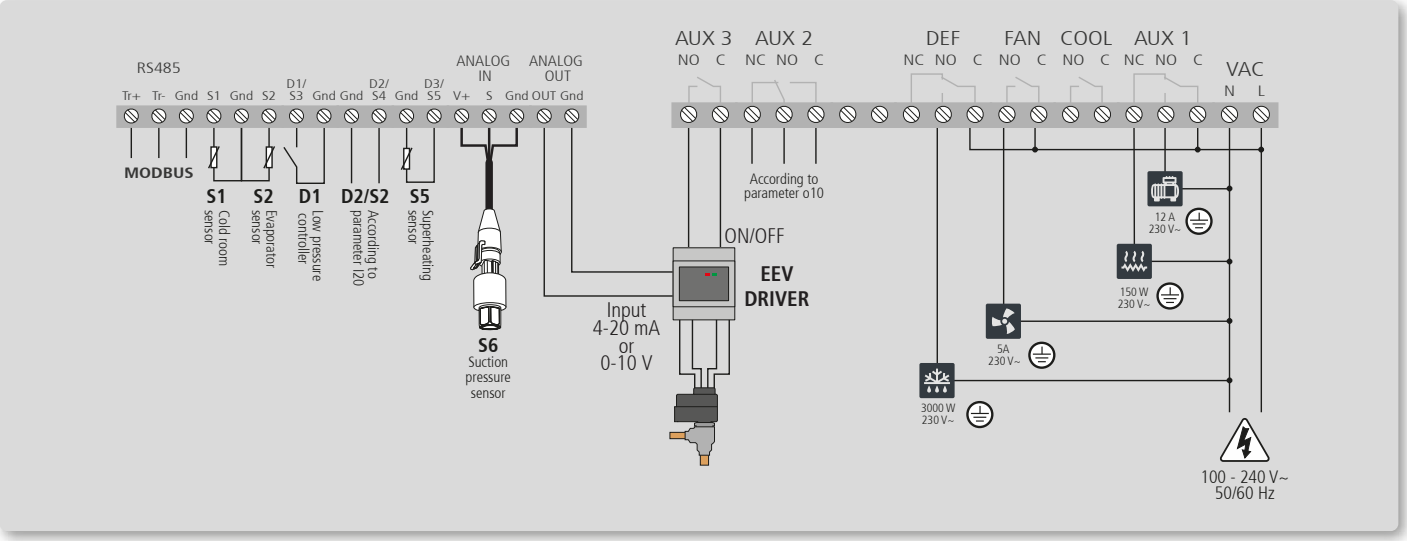

The function of the D2/S4 input depends on the configuration of parameter I20.
The function of the AUX 2 relay depends on the configuration of parameter o10.
For further information, please refer to the user manual available on our website.
https://help.ako.com/assets/uploads/351652662.pdf

COMPRESSOR
DEFROST RESISTORS/ DEFROST SOLENOID
RESISTANCE OF CARTRIDGE
EVAPORATOR FANS

Configuration

Before proceeding with the initial configuration, it is advisable to note down certain installation details:

Defrost

Note the defrosting method used:
Electrical (resistors), air (evaporator fans), hot gas valve (condensing unit) or cycle reversal.

Analogue outputs

The analogue output (ANALOG OUT) enables communication between the controller and the external controller of the electronic expansion valve and can be configured as 4-20 mA output (o30=0) or as 0-10 V output (o30=1).
Consult the specifications of the external controller and note them down.

SET POINT (temperature)

Make a note of the desired set temperature value.

Type of gas

Note the type of gas used in the installation.

Pressure sensor type

Note the type of evaporator pressure sensor installed:

4-20 mA (I61=1) 0-5 V (I61=2) 0.5-4.5 V (I61=3)
0-10 V (I61=4) 1-5 V(I61=5)

Note also the maximum and minimum values of the pressure sensor as well as the units of pressure used (bar or Psi).

Superheating SET POINT

Enter the desired optimum superheating value.

Assistant

The first time the unit receives the power supply, it will enter into ASSISTANT mode. The display will show the message Inl flashing at 0.

> The buttons ▲ and ▼ change the value, the **SET** button accepts the value and moves on to the next step.

Step 1:

Select the most suitable InI option based on the type of installation to be carried out and press **SET**.

The available options will be shown in the following table:

▲ / ▼ / SET

InI	Type of installation				Parameters											
	Control of the compressor	Pump Down	Defrost	Evap. Fans	Pd	o00	I00	I10	I11	I20	I21	I30	I31	d1	D7	F3
0	Demo mode: it displays the temperature but does not regulate the temperature															
1	No	No	Electric	Yes	0	0	2	0	0	0	0	*	*	20	0	0
2	Yes	Yes	Electric	Yes	1	1	2	7	1	0	0	*	*	20	0	0
3	Yes	No	Electric	Yes	0	1	2	0	0	0	0	*	*	20	0	0
4	No	No	Air	Yes	0	0	1	0	0	0	0	*	*	20	1	1
5	Yes	Yes	Air	Yes	1	1	1	7	1	0	0	*	*	20	1	1
6	Yes	No	Air	Yes	0	1	1	0	0	0	0	*	*	20	1	1
7	Yes	Yes	Hot gas	Yes	1	1	2	7	1	7	1	*	*	5	2	0
8	Yes	No	Hot gas	Yes	0	1	2	0	0	7	1	*	*	5	2	0

> If options 2, 5 or 7 are chosen, check the configuration of parameter I11 according to the pressure switch type used.

Step 2:

Define the type of refrigerant gas used.

▲ / ▼ / SET

u02=0	R404A	**u02=1**	R134A	**u02=2**	R407A	**u02=3**	R407F	**u02=4**	R410A	**u02=5**	R450A
u02=6	R513A	**u02=7**	R744	**u02=8**	R449A	**u02=9**	R290	**u02=10**	R32	**u02=11**	R448A
u02=12	R1234ze	**u02=13**	R23	**u02=14**	R717	**u02=15**	R407C	**u02=16**	1234yf	**u02=17**	R22
u02=18	R454C	**u02=19**	R455A	**u02=20**	R507A	**u02=21**	R515B	**u02=22**	R452A	**u02=23**	R452B
u02=24	R454A										

Step 3*:

Define the minimum value of the pressure sensor (**I62**) (value at 4 mA, 0 V, 0.5 V or 1 V according to I61).

Step 4*:

Define the maximum value of the pressure sensor (**I63**) (value at 20 mA, 5 V, 4.5 V or 10 V according to I61).

*Steps only visible if u02=7

Step 5:

Select the temperature set point.

▲ / ▼ / SET

Step 6:

Set all other parameters to default?

dFP=0	No, the other parameters do not need to be changed
dFP=1	Yes, set all other parameters to their default values.

This option only appears if this is not the first time the set-up wizard has been run.
The initial configuration is now complete, and the device will start to regulate the temperature.

> ℹ The configuration wizard will not reactivate. To reactivate it, activate the stand-by mode (by pressing the ⏻ button for 3 seconds) and wait until the unit completely halts regulation (the m indicator will light up permanently) and press the ▲, ▼, SET buttons in this order in sequence, not at the same time.

Additional configuration

Access the extended programming menu by pressing the **SET** button for 6 seconds to complete the configuration.
Access parameter **u00** and set it to 2 to use the Stepper-type electronic expansion valve.

u00=2	Electronic expansion valve

Access parameter **o30** (Analogue output) and configure the appropriate output type according to the driver used.
The driver input for the electronic expansion valve is connected to this output.
Consult the external driver specifications to configure this correctly.

o30=0	4 - 20 mA
o30=1	0 - 10 V

AKO ELECTROMECÁNICA, S.A.
Avda. Roquetes, 30-38
08812 • Sant Pere de Ribes.
Barcelona • Spain

www.ako.com

We reserve the right to supply materials slightly different to those described in our data sheets. Updated information on our website.

351652682 Rev. 02 2026