en

CE 1662H402 Ed.12

AKO-16624

Temperature and moisture controller for cold rooms

User Manual

AKO

Index

Page

Warnings....3
Wiring....3
Maintenance....3
Description....4
Installation....6
Initial configuration....7
Operation....9
Configuration....24
Connectivity....32
Technical specifications....33
Accessories....34

AKO Electromecánica thanks and congratulates you for purchasing our product, in whose development and manufacture the most innovative technology has been used, as well as strict production and quality control processes.

Our commitment to satisfy our customers and our continuous efforts to improve every day can be seen in the various quality certifications we have obtained.

This is a high performance, high technology product. The operation and final performance of the equipment depend on proper planning, installation, configuration and commissioning. Read this manual carefully before installation, and always follow its instructions.

Only qualified personnel should install or perform technical assistance on this product.

This product is designed to be used in the applications described in the product manual. AKO Electromecánica gives no guarantee of its operation in any use not foreseen in the manual, and is not responsible for any damage resulting from improper use, configuration, installation or commissioning.

It is the responsibility of the installer and the customer to comply with and ensure others comply with all regulations applicable to installations incorporating our products. AKO Electromecánica is not responsible for any damage caused by non-compliance with regulations. Follow strictly the instructions given in this manual.

To maximise the service life of our equipment, these recommendations should be followed:

- Do not expose electronic equipment to dust, dirt, water, rain, humidity, high temperatures, chemicals or corrosive substances of any sort.
- Do not submit the equipment to blows or vibrations nor try to manipulate it differently from shown in the manual.
- Never exceed the specifications and limitations indicated in the manual.
- Always respect the specified ambient working and storage conditions.
- During and after installation, avoid leaving loose, broken, unprotected or damaged wiring, since they might constitute a risk for the equipment and its users.

AKO Electromecánica reserves the right to make any non-metrology modification to the documentation or the equipment without previous notice

Warnings

-If the equipment is used without adhering to the manufacturer's instructions, the device safety requirements could be compromised. Only probes supplied by AKO must be used for the unit to operate correctly.

-From -40 °C to +20 °C, if the NTC probe is extended to 1000 m with at least a 0.5 mm^2 cable, the maximum deviation will be 0.25 °C (cable for probe extension ref. **AKO-15586**. Earth the cable mesh at one end only).

-Only NTC type probes supplied by AKO must be used for the appliance to operate correctly.

-It must be installed in a place protected from vibrations, water and corrosive gases, where the ambient temperature does not exceed the value indicated in the technical data.

-For the reading to be correct, the probe must be used in a place without thermal influences apart from the temperature you want to measure or control.

-IP65 protection degree is only valid with the protection cover closed.

-The IP65 protection degree is only valid if the cables enter the device through a tube for electric conduits + gland with IP65 or above. The size of the glands must be suitable for the diameter of the tube used.

-Do not spray the unit directly with high-pressure hoses, as this could damage it.

IMPORTANT:

- The AUXILIARY relays are programmable, and their operation depends on the configuration.
- The function of the digital inputs depends on the configuration.
- The recommended currents and powers are the maximum working currents and powers.

Wiring

Always disconnect the power supply to do the wiring.

The probes and their cables must **NEVER** be installed in a conduit together with power, control or power supply cables.

For disconnection, the power supply circuit must be equipped with at least a 2 A, 230 V switch, located near the device. The power supply cable shall be of the H05VV-F or NYM 1x16/3 type. The cross-section to be used will depend on the local regulations in force, but must never be less than 2.5 mm^2.

Cables for relay or contactor outputs must have a cross-section of 2.5 mm^2 and allow working temperatures equal to or over 70 °C and must be installed with as little bending as possible.

The 120/230 V~ wiring area must be kept clear of any other external element.

The wiring to be undertaken depends on the option selected in the initial configuration wizard (see p. 8). Use the appropriate diagram based on the option selected.

Check the available options on the diagram sheet included with your device.

Maintenance

Clean the surface of the unit with a soft cloth, water and soap.

Do not use abrasive detergents, petrol, alcohol or solvents, as this might damage the unit.

Description

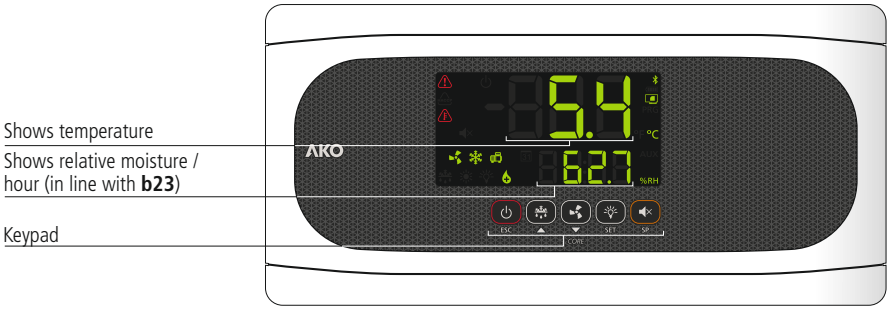

Indicators

Constant: Stand-By Mode activated. Regulation is paused.
Flashing: Controlled stop process for the regulation in progress.

Constant: Cold room door open.
Flashing: The door has been open for a longer time than defined in parameter **A12**.

There is an active alarm, but not an active HACCP alarm.

Constant: HACCP alarm active.
Flashing: HACCP alarm recorded and unconfirmed. Press the key to confirm an HACCP alarm.

There is an active alarm relating to the temperature or moisture probes.

Constant: Evaporator fans active.
Flashing: The evaporator fans should be active but a delay is preventing this, or their activation has been forced.

Constant: The cold solenoid is active.
Flashing: The solenoid should be active but a delay or protection is preventing this.

Constant: Compressor active.
Flashing: The compressor should be active but a delay or protection is preventing this.

Active heat provision, whether via evaporator resistors or Hot Gas.

Humidifier relay active.

Defrost relay active.

Cold room light active.

Alarm in progress muted.

°F °C Temperature displayed in ° Fahrenheit / ° Centigrade.

PRG Programming mode active.

AUX Dehumidifier relay active / virtual control relay active.

%RH The lower display shows the relative moisture value.

Constant: CAMM module in operation.
Flashing: Malfunction in CAMM module.

Bluetooth activated (only with CAMM module).

Keypad

ESC

Pressing it for 3 seconds activates/deactivates the Stand-By mode. In this mode, regulation is paused and the ⏻ icon is displayed.
In the programming menu, it exits the parameter without saving changes, returns to the previous level or exits programming.

Pressing once without holding displays the temperature of probe S2 for 10 seconds (if it is enabled).
Pressing it for 3 seconds starts/stops the defrost.
In the programming menu, it allows scrolling through the different levels, or during the setting of a parameter, changing its value.

Pressing for 3 seconds activates/deactivates the air extraction fan (If **o80**=1) or forces the evaporator fans (if **o80**= 0 or 2).
In the programming menu, it allows scrolling through the different levels, or during the setting of a parameter, changing its value.

SET

Pressing once without holding activates/deactivates the cold room light.
Pressing it for 3 seconds accesses the condensed programming menu.
Pressing it for 6 seconds accesses the expanded programming menu.
In the programming menu, it accesses the level shown on the display or, during the setting of a parameter, accepts the new value.

SP

By pressing once without holding down, the effective value of the temperature and moisture Set Points is displayed, taking into consideration temporary modifications by other parameters.
When an alarm is in progress, pressing once without holding mutes the acoustic alarm.
By pressing down for 3 seconds, access the Set Point settings.

STAND-BY
If the regulation cannot be instantly stopped due to its configuration, a controlled stop process starts and the ⏻ icon flashes. To stop the controlled stop process and force the step to Stand-by, press the Stand-by key again for 3 seconds.

Installation

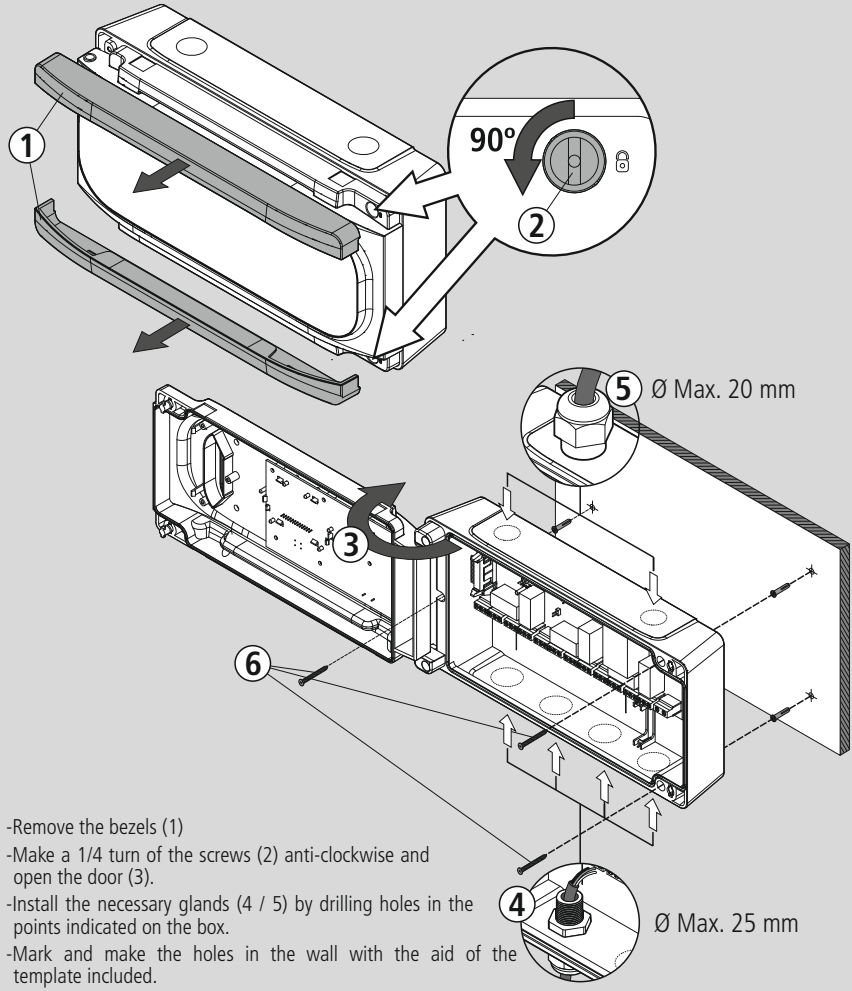

-Remove the bezels (1)

-Make a 1/4 turn of the screws (2) anti-clockwise and open the door (3).

-Install the necessary glands (4 / 5) by drilling holes in the points indicated on the box.

-Mark and make the holes in the wall with the aid of the template included.

-Fix the device to the wall. If it is a brick wall, use the screws and plugs supplied; if the wall is made of sheet metal (cold room store), use the screws provided without plugs (6).

-Wire the device by following the recommendations indicated on p. 3.

-Close the cover (3), tighten the screws (2) and replace the bezels (1).

Initial configuration

The first time the unit receives the power supply, it will enter into ASSISTANT mode. The lower display will show the message In1 flashing with **0**.

Step 1: Cold regulation type

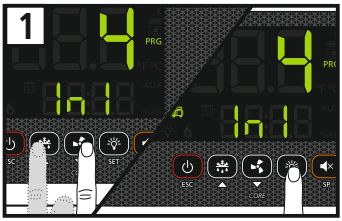

Select the most suitable option based on the type of installation to be carried out and press **SET**. The available options are shown in the table on the following page.

Step 2: Moisture regulation type

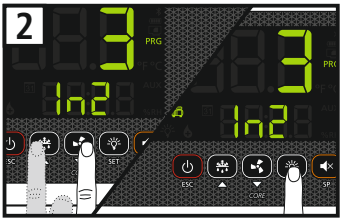

Select the most suitable option based on the type of installation to be carried out and press **SET**. The available options are shown in the table on the following page.

Step 3: Temperature Set Point

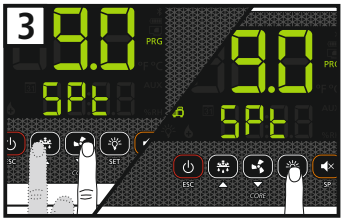

Use keys ▲ and ▼ to enter the desired Set Point value and press **SET**.

Step 4: Moisture Set Point

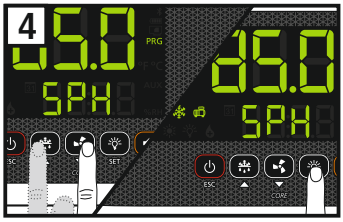

Use keys ▲ and ▼ to enter the desired moisture Set Point (**SPH**) value and press **SET**.

If this is not the first time you run the wizard, after completing the last step the display will show the message dFP (default parameters). You may choose between two options:

0: Only change the parameters which affect the wizard. The other parameters will remain the same.
1: All parameters return to their factory setting except those which have been modified by the wizard.

The configuration wizard will not reactivate. To reactivate it, activate the Stand-By mode (by pressing the ⏻ key for 3 seconds) and wait until the unit completely halts regulation (the ⏻ indicator will light up permanently) and press in this order the following keys (one after the other, not at the same time) ▲, ▼ and **SET**.

STAND-BY
If the regulation cannot be instantly stopped due to its configuration, a controlled stop process starts and the ⏻ icon flashes. To stop the controlled stop process and force the step to Stand-by, press the Stand-by key again for 3 seconds.

In1 table

In1	Installation type (Cold regulation)				Parameters						
	Cold regulation	Pump Down	Defrost	Evaporator fans	Pd	o00	o80	I10	I11	d7	F3
0	Demo mode: it displays the temperature but does not regulate the temperature or activate relays.										
1	Solenoid	No	Electric	Yes	#0	0	#2	0	0	#0	0
2	Solenoid	No	Air	Yes	#0	0	0	0	0	#1	#1
3	Solenoid	No	No	Yes	#0	0	0	0	0	#2	0
4	Solenoid + compressor	Yes	Electric	Yes	#1	#1	#2	#5	#1	#0	0
5	Solenoid + compressor	Yes	Air	Yes	#1	#1	0	#5	#1	#1	#1
6	Solenoid + compressor	Yes	No	Yes	#1	#1	0	#5	#1	#2	0
7	Solenoid + compressor	No	Electric	Yes	#0	#1	#2	0	0	#0	0
8	Solenoid + compressor	No	Air	Yes	#0	#1	0	0	0	#1	#1
9	Solenoid + compressor	No	No	Yes	#0	#1	0	0	0	#2	0
10	Solenoid + compressor	Yes	Hot gas - condensing unit	Yes	#1	#1	#2	#5	#1	#3	0
11	Solenoid + compressor	Yes	Hot gas - Cycle reversal	Yes	#1	#1	#2	#5	#1	#4	0
12	Solenoid + compressor	No	Hot gas - condensing unit	Yes	#0	#1	#2	0	0	#3	0
13	Solenoid + compressor	No	Hot gas - Cycle reversal	Yes	#0	#1	#2	0	0	#4	0

In2 table

In2	Installation type (Moisture regulation)				Parameters					Diagram to be used
	Humidifier	Heat provision	Dehumidifier	Extractor fan	o10	o20	o81	I20	I21	
1	ON/OFF	-	-	*	0	#0	#2	0	0	A
2	4-20 mA	-	-	*	0	#0	#2	0	0	B
3	ON/OFF	Resistors	-	*	0	#1	#2	0	0	A
4	4-20 mA	Resistors	-	*	0	#1	#2	0	0	B
5	No	Resistors	-	*	0	#1	0	0	0	A
6	ON/OFF	Hot gas	-	*	#4	#0	#2	#5	#1	A
7	4-20 mA	Hot gas	-	*	#4	#0	#2	#5	#1	B
8	No	Hot gas	-	*	#4	#0	0	#5	#1	A
9	ON/OFF	Hot gas + resistors	-	*	#4	#1	#2	#5	#1	A
10	4-20 mA	Hot gas + resistors	-	*	#4	#1	#2	#5	#1	B
11	No	Hot gas + resistors	-	*	#4	#1	0	#5	#1	A
12	ON/OFF	-	Yes	*	0	#2	#2	0	0	C
13	4-20 mA	-	Yes	*	0	#2	#2	0	0	D
14	No	-	Yes	*	0	#2	0	0	0	C

* If the DEF relay is free (**In1**=3, 6 or 9), it can be used to connect the extractor fan, configuring **o80**=1. If the HUMID. relay is free (**In2**=5, 8, 11 or 14), it can be used to connect the extractor fan, configuring **o81**=1 (see p. 28).

\# Values marked with the # symbol are blocked due to the In1/In2 option chosen. To modify them, choose a different In1/In2 option.

Operation

Messages

MESSAGES	
Pd	Pump down malfunction error (stop), the time configured in parameter C20 has been exceeded (see p. 15). Only displayed on screen.
LP	Pump down malfunction error (start-up), the time configured in parameter C19 has been exceeded (see p. 15). Only displayed on screen.
E1/2/3	Probe 1/2/3 failure (open circuit, crossed circuit or temperature outside the limits of the probe) (Equivalent limits in °F). Only E2 and E3: Damp evaporator probe (see p. 19). Activates the alarm relay and the audible alarm.
3.9 °C EH	Moisture probe failure (Open circuit, crossed circuit or values beyond probe limits) (see p. 19). Activates the alarm relay and the audible alarm.
AdO	Open door alarm. Only if the door remains open for a longer time than defined in parameter **A12** (see p. 19). Activates the alarm relay and the audible alarm.
AH	Maximum temperature in control probe alarm. The temperature value programmed in **A1** has been reached (see p. 18). Activates the alarm relay and the audible alarm.
AL	Minimum temperature in control probe alarm. The temperature value programmed in **A2** has been reached (see p. 18). Activates the alarm relay and the audible alarm.
AE	External alarm activated (by digital input) (see p. 18). Activates the alarm relay and the audible alarm.
AES	Severe external alarm activated (by digital input) (see p. 18). Activates the alarm relay and the audible alarm.
Adt	Alarm for defrost completed due to time-out. The time set in **d1** has been exceeded (see p. 20).
HCP	HACCP alarm. The temperature has reached the value of parameter **h1** during a longer period than established in **h2** (see p. 19). Activates the alarm relay and the audible alarm.
HCP/PF	HACCP alarm due to a power supply failure. The temperature established in **h1** has been reached, following a power supply failure (see p. 19). Activates the alarm relay and the audible alarm.
dEF	Indicates that a defrost is being performed (see p. 16). Only displayed on screen.

MESSAGES	
	Password request. See parameters **b10** and **PAS** (see p. 27). Only displayed on screen.
	Shown sequentially with the temperature: The controller is in demo mode, the configuration has not been made.
	Maximum moisture alarm in moisture probe. The temperature value programmed in **A21** has been reached (see p. 19). Activates the alarm relay and the audible alarm.
	Minimum moisture alarm in moisture probe. The temperature value programmed in **A22** has been reached (see p. 19). Activates the alarm relay and the audible alarm.
	Indicates that the extractor fans are activated. (see p. 18).

Cold regulation

Solenoid control (COOL Relay)

Cold production is regulated by means of opening / closing the solenoid valve.

When the temperature in probe S1 reaches the set point (**SPt**) value plus the probe's differential (**C1**), the solenoid opens and causes the temperature to drop. Once the set point (**SPt**) value is reached, the solenoid closes.

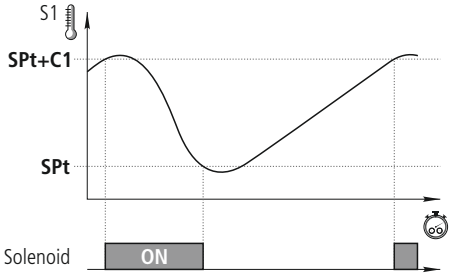

Compressor control (Relay AUX 1)

With Pump Down (**In1**: 4, 5, 6)

Requires the connection of a low pressure switch in digital input 1.

When the temperature in probe S1 reaches the set point (**SPt**) value plus the probe's differential (**C1**), the solenoid opens, causing the pressure in the evaporator to increase and, therefore, the low pressure switch deactivates and the compressor starts up.

Once the set point (**SPt**) value is reached, the solenoid closes, causing the pressure in the evaporator to decrease, triggering the low pressure switch and stopping the compressor.

For further details of the process, see the next page.

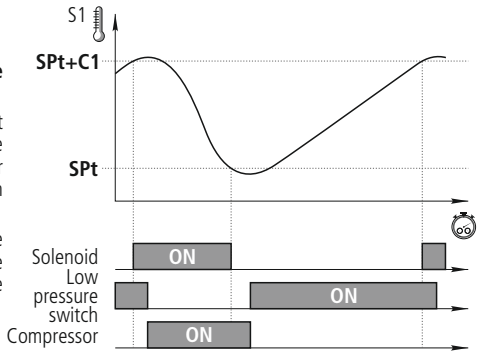

Without Pump Down (**Inl:** 7, 8, 9)

The compressor operates simultaneously with the solenoid valve, starting up when the latter opens and stopping when it closes.

Operation in the event of a fault in probe S1

If probe S1 fails (fault, disconnection, etc.), compressor behaviour will depend on parameter **C6**, with one of 3 options available:

C6=0: The compressor is stopped until probe S1 begins to operate again.
C6=1: The compressor is started-up until probe S1 begins to operate again
C6=2: The compressor operates in line with the times programmed in **C7** (ON) and **C8** (OFF).

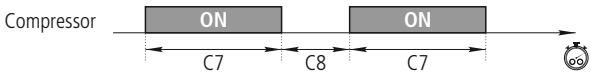

Calibration of probe 1

Parameter **C0** allows for correction of the temperature detected by probe 1; this is particularly useful when the probe cannot be located in the ideal place.

Set Point locking

Parameters **C2** and **C3** allow for an upper and lower limit to be established for the set point (**SPt**), to protect the product or installation from Set Point manipulation.

Compressor protection timing

Parameter **C4** allows for selection of the type of timing to be applied to protect the compressor. These delays prevent continuous compressor starts and stops.

These timings affect the COOL and AUX 1 relays (if **o00**=1)

OFF-ON (C4=0)**:** Minimum time in OFF mode before each start-up.

OFF-ON / ON-OFF (C4=1)**:** Minimum time in ON and OFF mode for each cycle.

The delay time is defined by means of parameter **C5**; if **C5**=0, timing is disabled.

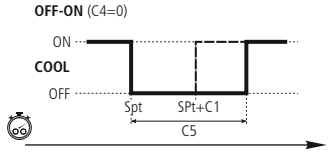

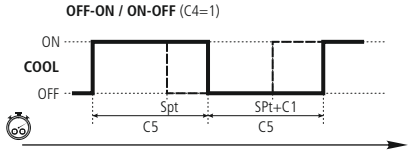

Moisture regulation

Moisture regulation is carried out using the moisture probe and the regulation of different devices:

To **increase** moisture

- **Humidifier:** Connected to the HUMID. relay (**In2**: 1, 3, 6, 9 and 12) (Control ON/OFF) or to the analogue output AN. OUT (**In2**: 2, 4, 7, 10 and 13) (Control 4-20 mA), it increases cold room moisture as necessary.

To **reduce** moisture

- **Dehumidifier:** Connected to the AUX 3 relay (**In2**: 12, 13 and 14), reduces cold room moisture as necessary.
- **Cold provision:** Through cold provision, cold room moisture is reduced, provided that the cold room's temperature is higher than the temperature Set Point.
- **Heat + cold provision:** Through heat provision, whether via resistors or Hot Gas (or both), the unit can produce cold for a longer period of time to reduce moisture even below the temperature Set Point, since heat provision will regulate the temperature.

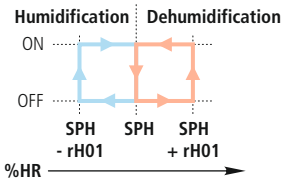

If the moisture probe reaches the Set Point value (**SPH**) plus the differential (**rH01**), dehumidification is activated until the **SPH** is reached.

If the moisture probe reaches the Set Point value (**SPH**) minus the differential (**rH01**), humidification is activated until the **SPH** is reached.

> **i** The rH07 parameter allows the dehumidification function to be disabled (rH07 = 0, dehumidification enabled, rH07 = 1 dehumidification disabled).
> If a dehumidifier has been connected (In2 = 12, 13 or 14), rH07 is locked at 0; to modify it, choose an In2 option without a dehumidifier.

Regulation types, depending on the installation

The controller's priority is temperature regulation.
The rH07 parameter allows the dehumidification function to be disabled (rH07 = 0, dehumidification enabled, rH07 = 1 dehumidification disabled).
If the SH probe is disabled (I00 = 3 or 4), the controller stops regulating moisture, and the display does not show any error message.

Humidification + Dehumidification (via cold provision) - **In2:** 1 and 2

To increase moisture, the humidifier is activated and to reduce moisture, cold provision is activated, provided that the temperature is above the **Spt**.

If the temperature reaches the **SPt** value, dehumidification stops.

Humidification + Dehumidification (via cold + heat provision) - **In2:** 3, 4, 6, 7, 9 and 10

To increase moisture, the humidifier is activated and to reduce moisture, cold provision is activated.

If, during this process, the temperature falls below the **SPt** minus the **C1** differential, heat provision is activated, firstly via Hot Gas (if available) and, after the time defined in **rH06** has elapsed, via electrical resistors (if available), until the temperature reaches the **SPt** again.

Should heat provision via Hot Gas not be available, the resistors are activated without taking parameter **rH06** into account.

Humidification + Dehumidification (via dehumidifier + cold provision) - **In2:** 12 and 13

To increase moisture, the humidifier is activated and to reduce moisture, the dehumidifier is activated.

If, after the time defined in **rH05** has elapsed, moisture has not reduced to the **SPH** value and the cold room temperature is higher than the **SPt**, heat provision is activated to reduce moisture.

If the temperature reaches the **SPt** value, cold provision stops but the dehumidifier remains active until the **SPH** value is reached.

Only Dehumidification (via cold + heat provision) - **In2:** 5, 8 and 11

The controller cannot increase cold room moisture; it can only reduce it by activating cold provision.

If, during this process, the temperature falls below the **SPt** minus the **C1** differential, heat provision is activated, firstly via Hot Gas (if available) and, after the time defined in **rH06** has elapsed, via electrical resistors (if available), until the temperature reaches the **SPt** again.

Should heat provision via Hot Gas not be available, the resistors are activated without taking parameter **rH06** into account.

Only Dehumidification (via dehumidifier + cold provision) - **In2:** 14

The controller cannot increase cold room moisture; it can only reduce it by activating the dehumidifier.

If, after the time defined in **rH05** has elapsed, moisture has not reduced to the **SPH** value and the cold room temperature is higher than the **SPt**, heat provision is activated to reduce moisture.

If the temperature reaches the **SPt** value, cold provision stops but the dehumidifier remains active until the **SPH** value is reached.

Humidifier control

Humidifier control can be carried out in two possible ways:

- **ON/OFF:** Regulation is carried out by activating or deactivating the humidifier. (**In2**: 1, 3, 6, 9 and 12)
- **4-20 mA:** The analogue output (AN. OUT) is used to adjust humidifier power using a PI regulation. (**In2**: 2, 4, 7, 10 and 13).

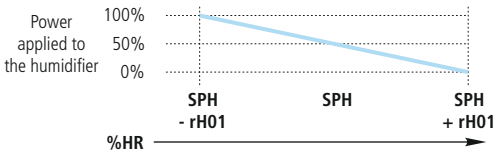

Heat supply

There are 3 possible methods of adding heat to the chamber:

Electric heating elements:

Heat is added by activating an electric heating element inside the evaporator (in the air outlet) by means of the AUX 3 relay (o20 = 1). They are used during dehumidification or if there is a demand for heat.

Hot Gas:

Hot gas is circulated through an additional circuit within the evaporator.

By activating the AUX 2 relay (o10 = 4), the inlet valve to the condenser (A) is closed and the Hot Gas valve (B) opens, circulating hot gas through the evaporator. If the Hot Gas high pressure switch (D) is activated, the AUX 2 relay switches again, closing the passage of hot gas through the evaporator.

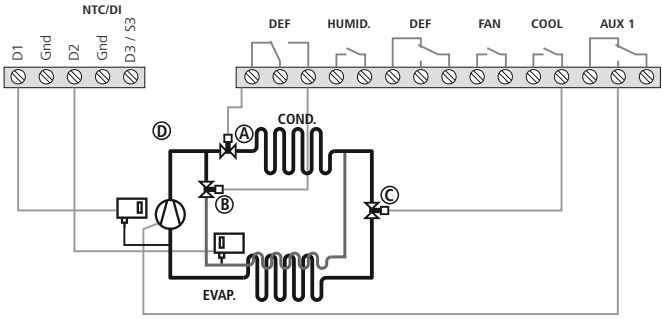

Electric heating elements + hot gas:

Both methods are combined, hot gas as the main method of heat input and heating elements as a supplementary aid.

Operation in the event of a fault in probe SH

If probe SH is faulty (failure, disconnection, etc.), the controller stops regulating moisture and shows the message *EH* on the lower display.
If the SH probe is disabled (I00 = 3 or 4), the controller stops regulating moisture, and the display does not show any error message.

Calibration of probe SH

Parameter **rH00** allows for correction of relative moisture as detected by probe SH; this is particularly useful when the probe cannot be located in the ideal place.

Moisture Set Point locking

Parameters **rH02** and **rH03** allow for an upper and lower limit to be established for the moisture set point (**SPH**), to protect the product or installation from unsuitable Set Point manipulation.

Operating mode selector

Pressing an external switch allows us to quickly change between two operating modes: temperature and moisture regulation or only temperature regulation.

This function may be useful if the same cold room is used for different types of applications.

The external switch should be connected to one of the digital inputs and this should be configured as a "Temp. control / temp. + moist. selector" (**I10 / I20 / I30**=4).

Door management

Door management allows for the installation's behaviour to be controlled, should the cold room door open through parameters **C22** and **C23**.

Parameter **C22** defines whether cold production should be stopped if the door opens. If **C22**=1, when the door opens, the fans stop and, 15 seconds later, the solenoid closes (COOL relay).

Parameter **C23** defines the maximum time, in minutes, that the installation can remain without producing cold whilst the door is open. If **C23**=0, cold is not produced with the door open.

Configuration:
C22: 1
C23: 5

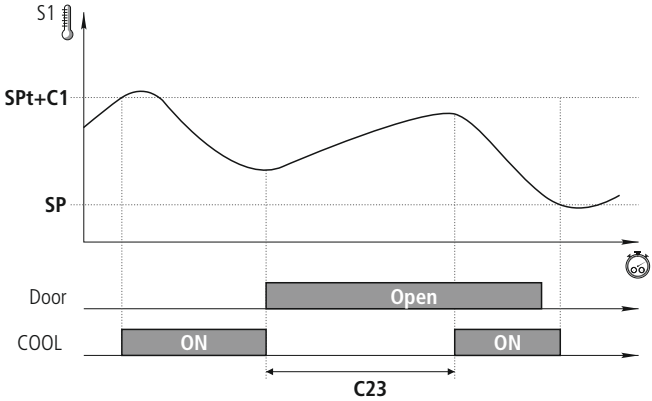

Pump down function

This function foresees problems in the compressor caused by movements of coolant, using a stop/start technique for the installation, controlled via the liquid solenoid, the low pressure switch and the compressor itself.

This function is only available for ini options 4, 5, and 6 and 12 and requires the connection of a low pressure switch in digital input 1. (**I10**=5)

STOP

When the temperature in probe S1 reaches the set point (**SPt**) value, the COOL relay deactivates, closing the liquid solenoid.

Because the compressor continues to operate, pressure in the evaporator quickly drops. Upon reaching a given value, the low pressure switch activates, changing the status of digital input 1, which stops the compressor (relay AUX 1).

This manoeuvre isolates all of the coolant in the high-pressure line, far from the compressor crankcase, preventing serious faults upon start-up.

Should the low pressure switch fail, the controller stops the compressor once the safety interval defined in **C20** has elapsed, displaying the message "Pd" (an informative message that does not affect the unit's operation).

If **C20** time is 0 (default value), the compressor will not stop until the low pressure switch is activated, but it will display the "Pd" message after 15 minutes.

START

When the temperature in probe S1 reaches the set point value plus the differential (**SPt**+**C1**), the COOL relay activates, opening the liquid solenoid. This increases the pressure in the evaporator, deactivating the low pressure switch, which turns the compressor on.

If, some time (determined by **C19**) after the liquid solenoid is opened (COOL relay set to ON), the low pressure switch does not deactivate, the controller will once again close the solenoid (COOL relay set to OFF) and the "LP" message will be displayed. This manoeuvre will be repeated every 2 minutes, indefinitely, until the pressure switch is deactivated and the installation reverts to its normal operation.

If **C19** time is 0 (default value), the solenoid will remain open until the low pressure switch deactivates, but it will display the "LP" message after 5 minutes.

STAND-BY

If the pump down function is active, a certain amount of time may elapse between starting the stand-by function and the controller stopping; this is because certain installation control phases cannot be interrupted.

To force the stop of the controller, press the Stand-by key again for 3 seconds.

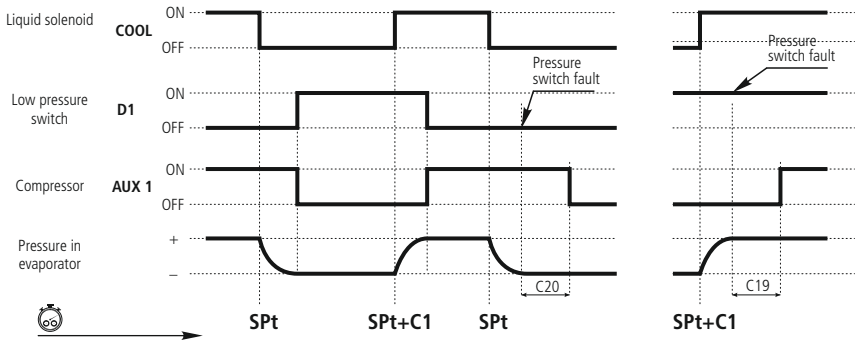

Defrost

Types of defrost

There are 5 possible defrost types, depending on the option selected in the wizard (In1):

Electric (**Inl=**1, 4 and 7) (**d7**=0)

Defrost is performed through electrical resistors, supplying the evaporator with heat. The operation of fans in this mode depends on parameter **F3**; the compressor and solenoid are stopped.

By air (**Inl=**2, 5 and 8) (**d7**=1)

Usually used in positive cold rooms (> 3°C), since the inside temperature of the cold room is sufficient to melt evaporator ice. By default, the fans are activated so that air may circulate through the evaporator; to stop them, change parameter F3 to 0. The compressor and solenoid are stopped.

Hot gas (**In1=**10 y 12) (**d7=**3)

The hot gas from compressor discharge is used to melt evaporator ice and, to this end, two valves are necessary: one at the condenser input (A) and another between the compressor output and the evaporator input (B) (DEF relay).

During the process, the liquid solenoid valve (C) and the condenser input valve (A) is closed and the evaporator input valve (B) is opened, forcing hot gas to pass through the latter, melting the ice.

Optionally, a high pressure switch (D) (digital input D3, I30 = 8) can be added to control the solenoid valve during the hot gas defrost process. If the pressure decreases, the solenoid opens to allow liquid into the tank; when the pressure rises again, the solenoid closes.

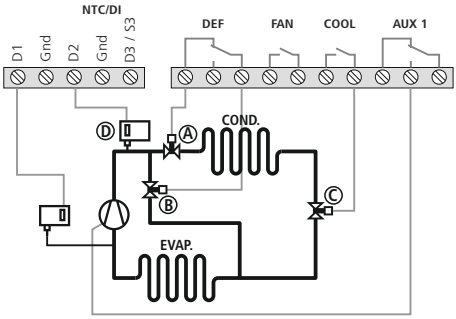

Reverse cycle (**In1=**11 and 13) (**d7=**4)

A 4-way valve (A) is used to reverse the installation cycle, using the evaporator as a condenser to melt the ice formed.

The process begins by stopping cold production (if it is active). If Pump Down is active, defrost begins once the manoeuvre is complete.

Next, the 4-way valve (A) is activated (DEF relay ON), alongside the solenoid (COOL relay ON) and the compressor (AUX 1 ON), and the defrost process begins. D1 time begins to be counted after the COOL relay is activated.

When defrost is complete, the manoeuvre can be stopped in two possible ways:

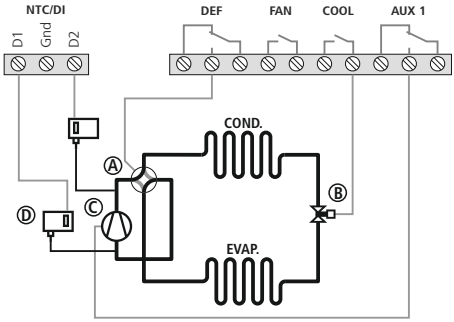

- Pump down active (In1=11): The solenoid closes (COOL relay OFF) and the 4-way valve returns to its initial position (DEF relay OFF) whilst the compressor continues to operate (AUX 1 relay ON), until the low pressure switch (D) activates, stopping the compressor (AUX 1 relay OFF) and starting the drip time.
- Without Pump Down (In1=13): The solenoid closes (COOL relay OFF) and the 4-way valve returns to its initial position (DEF relay OFF) and the compressor stops (AUX 1 relay OFF), starting the drip time.

No defrost (**Inl=**3, 6 and 9) (**d7**=2)

Defrost is not carried out

Defrost control

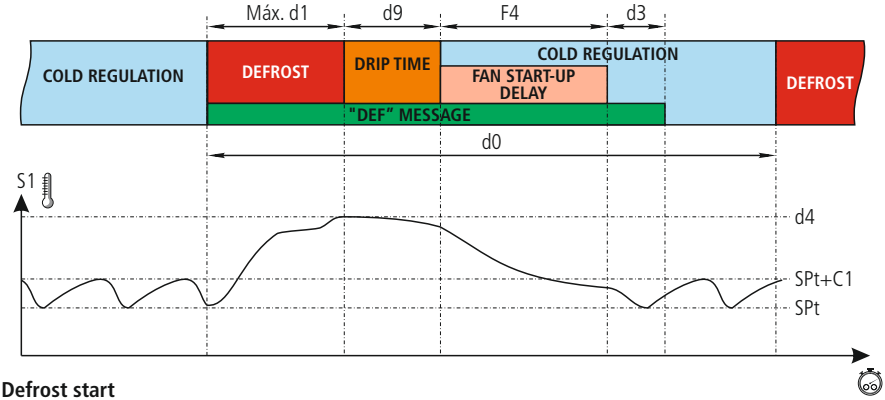

Defrost start

Defrost will start if:

- -The time programmed in parameter **d0** has elapsed since the start of the last defrost.
- -We press the ❄ key for 3 seconds.
- -Through the app or through AKONet.

Defrost completion

Defrost will complete if:

- -The temperature programmed in parameter **d4** has been reached in probe 2. This requires a 2nd probe (**I00**=2) to be available, located in the evaporator.
- -The time configured in parameter **d1** has elapsed (maximum defrost duration).
- -We press the ❄ key for 5 seconds.
- -Through the app or through AKONet.

Drip time

This is established through parameter **d9** and sets the time added at the end of defrost to allow for the removal of surplus water from melted evaporator ice, during which there is no cold regulation.

Fan start-up delay

This is established through parameter **F4** and allows for the possible drops left in the evaporator to freeze before the fans activate, preventing them from being projected into the cold room. It also prevents heat being supplied to the cold room due to defrost in the evaporator.

> If defrost is cancelled before 1 minute has elapsed, the drip time (**d9**) is not applied and the fans are activated without taking into account the start-up delay (**F4**).
> If defrost is by air, the drip time (**d9**) and fan start-up delay (**F4**) are deactivated.

Message displayed during defrost

This is established using parameter **d2**, and you can choose between displaying the real temperature captured by probe 1 (**d2**=0), showing the temperature captured by probe 1 at the start of the defrost (**d2**=1), or displaying the dEF (**d2**=2) message. Parameter **d3** defines the time during which the aforementioned message will be displayed once the drip time (**d9**) and fan stop time (**F4**) are complete.

Other parameters

Using parameter **d5**, you can configure whether the unit performs a defrost (**d5**=1) or not (**d5**=0) when it receives power (first start-up or after a power supply failure). Should the option YES (**d5**=1) be selected, defrost will begin once the delay time defined in **d6** has elapsed.

Using parameter **d8**, we define the time tally established in **d0**, choosing between total time elapsed (**d8**=0) or the sum of compressor operation time (**d8**=1).

> **REMARK:** If parameter **d1** is configured to 0, no defrosts are performed.

Evaporator fan control

Fans are controlled through probe 2 (evaporator) and parameters **F0** (stop temperature) and **F1** (probe differential).

If probe 2 is not connected or an error in the probe (E2) is detected, the fans continuously operate without taking into account parameters **F0** and **F1**, but taking the remaining parameters (**F2** to **F4**) into account.

Using parameter **F2**, the status of the fans during compressor stops is defined.

Using parameter **F3**, the status of the fans during defrost is defined.

Parameter **F4** defines the fan start-up delay time after defrost (see p. 16).

Parameter **C22** defines whether fans stop when the door is opened.

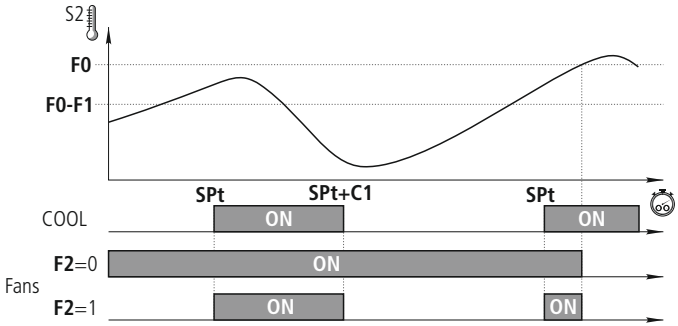

Anti-stratification function (Only if F2=1)

This prevents layers of air of different temperatures (stratification) from forming inside the cold room by moving the air using the evaporator's fans.T

The fans are activated if they stop for a longer period than that defined in parameter **F10** and deactivate once the time defined in **F11** has elapsed, or by forcing activation using the + button (if **o80**= 0 or 2).

Extractor fans

This allows for air to be extracted from inside the cold room using an extractor fan connected to the DEF or HUMID. relay.

To activate this function, the DEF or HUMID. relay should be available and configured as "Extractor fans" (**o80**=1 or **o81**=1).

The DEF relay is available depending on the option chosen in In1 (3, 6 or 9) and the HUMID. relay is available depending on the option chosen in **In2** (5, 8, 11 or 14).

Alarms

The device warns the user through an on-screen message, activation of a relay (only if **o10**=1) and a sound alarm when the criteria programmed in the parameters are met.

Maximum / minimum temperature alarm

It shows the message "AH" or "AL" when the temperature in probe 1 reaches the value configured in parameters **A1** (maximum temperature) and **A2** (minimum temperature).

This value may be:

- Absolute (**A0**=1): The temperature at which the alarm should activate must be indicated in **A1/A2**.
- Relative to the SP (**A0**=0): The increase or decrease in the number of degrees necessary for the alarm to activate, in relation to the set point, must be indicated in **A1/A2**. This option enables us to change the set point without having to reset the maximum and minimum alarms.

Parameter **A10** establishes the differential of both parameters (Hysteresis).

<u>Example</u>

We configure the following parameters in a controller: **SP**=2, **A1**=10, **A10**=2

-If **A0**=0 (Relative to the SP), the maximum temperature alarm will activate when 12 degrees are reached in probe 1, and will deactivate when 10 degrees are reached.

-If **A0**=1 (Absolute), the maximum temperature alarm will activate when 10 degrees are reached in probe 1, and will deactivate when 8 degrees are reached

External alarm / severe external alarm

The message EA (External alarm) or SEA (Severe external alarm) is displayed when the digital input configured as external alarm or severe external alarm is activated.

The severe external alarm also deactivates all the loads and, therefore, temperature regulation stops. When this alarm disappears, the device returns to its normal operation.

At least one of the digital inputs must be configured as an external alarm (**I10** or **I20**=2) or as a severe external alarm (**I10** or **I20**=3).

Temperature probe error alarm

If one of the enabled probes is crossed, in open circuit or out of range, the message E1, E2 or E3 will be shown, depending on whether probe S1, S2 or S3 is involved.

Evaporator probe error alarm due to moisture ingress

If, at the start of defrost, the temperature in probe S2 is 20°C higher than the temperature in probe S1, the defrost ignores probe S2 and completes due to time-out.

The display shows the message E2, activates the alarm relay (only if **o10**=1) and sound alarm.

The alarm can be silenced, but the ⚠ alarm icon will not disappear until:

- The controller is switched off and then on again.
- Defrost without error is started in probe S2.

Moisture probe error alarm

If the moisture probe is crossed, in open circuit or out of range, the message EH will appear on the lower display.

Maximum / minimum moisture alarm

This shows the message AHH or ALH when the moisture in probe SH reaches the value configured in parameters **A21** (maximum moisture) and **A22** (minimum moisture).

This value may be:

- Absolute (**A20**=1): The temperature at which the alarm should activate must be indicated in **A21/A22**.
- Relative to the SPH (**A20**=0): The increase or decrease in moisture % for the alarm to activate, in relation to the set point, must be indicated in **A21/A22**. This option enables us to change the set point without having to reset the maximum and minimum alarms.

Parameter **A23** establishes the differential of both parameters (Hysteresis).

Open door alarm

The door has been open for a longer time than defined in parameter **A12**, the open door alarm is activated.

In order to detect the open door, configuration is required of one of the digital inputs as "door contact" (**I10** or **I20**=1).

Activates alarm relay (only if **P62**=1) and sound alarm.

HACCP alarm

The alarm is activated should situations be detected which could endanger the integrity of the products stored in the cold room.

If the temperature of the cold room is higher than that defined in parameter **h1** for a length of time exceeding that defined in parameter **h2**, the alarm activates, displaying the message hCP. on screen.

Upon pressing the mute key, the sound alarm switches off, but the alarm remains.

Once the temperature drops below parameter **h1**, if the mute key has been pressed, the alarm disappears. If the mute key has not been pressed, the audible alarm deactivates but the HACCP indicator remains in flashing mode, indicating than a non-confirmed HACCP alarm has occurred.

Press the mute key to confirm an HACCP alarm.

If, during a power failure, a HACCP alarm occurs, when the power supply returns, the HACCP alarm is activated and the display shows the messages hCP and PF (power failure) alternately.

Alarm delays

These delays prevent certain alarms from being shown, to allow the installation to recover its normal operation after certain events.

- Delays in start-up (A3): This delays the activation of the temperature alarms upon receiving power (at start-up or after a power supply failure) or when exiting Stand-by mode. This allows for the installation to start up avoiding alarms.
- Delay after a defrost (A4): This delays the activation of the temperature and moisture alarms when a defrost completes.A205
- Delay to minimum and maximum temperature alarm (A5): This delays the activation of the maximum (A1) and minimum (A2) temperature alarms, from when the temperature in probe 1 reaches the programmed value.
- Delay to minimum and maximum moisture alarm (A24): This delays the activation of the maximum (A21) and minimum (A22) moisture alarms, from when the moisture reaches the programmed value.
- Delay to activation of external alarm (A6): This delays the activation of the external alarm, from when the digital input becomes active.
- Delay to deactivation of external alarm (A7): This delays the deactivation of the external alarm, from when the digital input becomes active.
- Delay to open door alarm (A12): This delays the activation of the alarm upon detecting that the door is open.

Configuration of alarm relay

Should relay AUX 2 have been configured as an alarm (**o10**=1), parameter **A9** allows for the relay status to be defined when an alarm is triggered:

A9=0 Relay active (ON) in the event of an alarm (OFF without alarm)

A9=1 Relay inactive (OFF) in the event of an alarm (ON without alarm)

Alerts

The device alerts the user through an on-screen message when an event occurs which requires his/her attention. However, it does not activate the sound alarm or the alarm relay (if active).

Alert: defrost finished by time

The message *Adt* is displayed when a defrost has completed due to time-out, if parameter **A8**=1.

Pump down malfunction error (stop)

The message *Pd* is displayed if a malfunction is detected when the installation is stopped using the pump down manoeuvre. (See p. 15).

Pump down malfunction error (start-up)

Displays the *LP* message if a malfunction is detected when the installation is started up using the pump down manoeuvre. (See p. 15).

Light control

Relay AUX 1 or AUX 2 must be configured as "Light" (**o00** or **o10**=2).

Switching the lights on or off is controlled using:

The push-button: One press switches the lights on or off.

The cold room door: When the door is opened, the lights remain on for the time defined by parameter **b01**. If the value is 0, when the door closes the lights go out. (One of the digital inputs must be configured as door contact (**I10, I20** or **I30**=1).

The control even occurs with the equipment in Stand-by.

Password

It allows protecting the configuration of the unit using a 2 digit code (from 01 to 99). If it is active a code is requested when you try to access the programming menu. This menu cannot be accessed if a wrong value is entered. The code is set via the **PAS** parameter.

Parameter **b10** defines the operation of this code.

Operation of the auxiliary relays

Depending on the controller model, it may have 1 or 2 auxiliary relays. The function of these relays is configurable through the parameters menu.

AUX 1 relay

- **Deactivated** (**o00**=0): It does not carry out any function.
- **Compressors / crankcase resistor** (**o00**=1): Controls compressor operation. When the compressor is not in operation, it powers the crankcase resistor. This function can only be selected via the initial wizard (ini).
- **Light** (**o00**=2): This regulates the operation of cold room light (see p. 20).
- **Virtual control** (**o00**=3): The relay can be remotely activated and deactivated by means of AKONet software.
- **Same as solenoid status** (**o00**=4): Imitates solenoid status: active if the solenoid is in ON mode, inactive if the solenoid is in OFF mode.
- **Same as unit status** (**o00**=5): indicates the unit's status: active if the unit is in ON mode, inactive if the unit is in Stand-by mode.

AUX 2 relay

- **Deactivated** (**o10**=0): It does not carry out any function.
- **Alarm** (**o10**=1): This activates the relay every time that an alarm occurs (see p. 20).
- **Light** (**o10**=2): This regulates the operation of cold room light (see p. 20).
- **Virtual control** (**o10**=3): The relay can be remotely activated and deactivated by means of AKONet software.
- **HG heat solenoid** (**o10**=4): Controls the operation of heat provision via Hot Gas.

AUX 3 relay

- **Deactivated** (**o20**=0): It does not carry out any function.
- **Auxiliary resistors** (**o20**=1): Controls the auxiliary resistors for heat provision.
- **Dehumidifier** (**o20**=2): Controls dehumidifier operation.

Remote Stand-by mode

This allows activating Stand-by mode using a switch connected to one of the digital inputs. Said digital input must be set to Stand-by remote activation (I10=8 or I20=12).

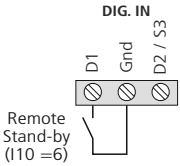

Configuration

Condensed programming menu

This allows for the most-used parameters to be quickly configured. Press the **SET** key for 3 seconds to access it.

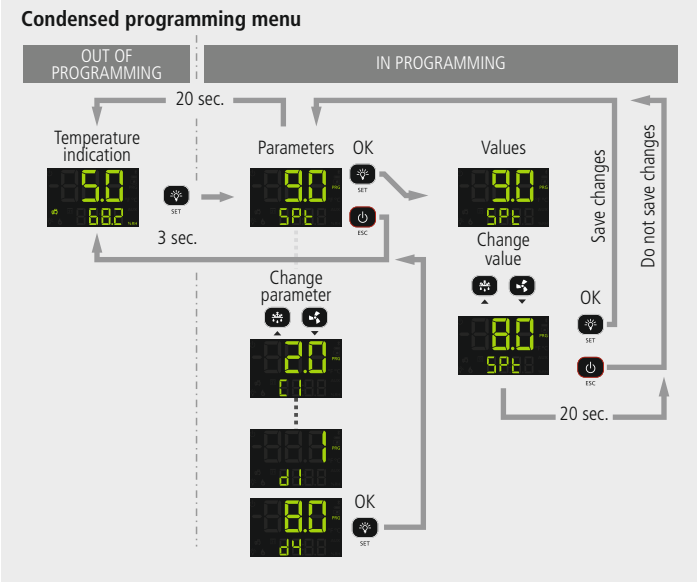

Parameters

Level 2	Description	Values	Min.	Def.	Max.
SPt	Temperature setting (Set Point)	°C/°F	-50	9.0	99
C1	Probe 1 differential (Hysteresis)	°C/°F	0.2	2.0	20.0
SPH	Moisture setting (Moisture set point)	% HR	30	85	100
rH01	Moisture probe differential (Hysteresis)	% HR	0.5	5	100
A1	Alarm for maximum in probe 1 (It should be higher than the SP)	°C/°F	A2	99	99
A2	Alarm for minimum in probe 1 (It should be lower than the SP)	°C/°F	-50	-20	A1
A21	Maximum moisture alarm (it must be higher than the SPH)	% HR	A22	20	100
A22	Minimum moisture alarm (it must be lower than the SPH)	% HR	-50	-40	A21
F3	Status of the fans during the defrost **0**=Shut down; **1**=Running		0	*	1
d0	Defrost frequency (Time between 2 starts)	H.	0	6	96
d1	Maximum defrost duration (**0**=defrost deactivated)	Min.	0	60	255
d4	Final defrost temperature (via probe 2, **I00**=2)	°C/°F	-50	8.0	50

* According to wizard.

Extended programming menu

Use the extended programming menu to configure all of the unit's parameters in order to adapt it to your installation requirements. Press the **SET** key for 6 seconds to access it.

IMPORTANT: If the password function has been configured as a keypad lock (**b10**=2), or as an access to parameters block (**b10**=1), you will be requested to enter the password programmed in **PAS** when attempting to access either of the two functions. If the entered password is not correct, the unit will go back to showing the temperature.

IMPORTANT: Certain parameters or menus may not be visible depending on the configuration of the rest of the parameters.

Extended programming menu

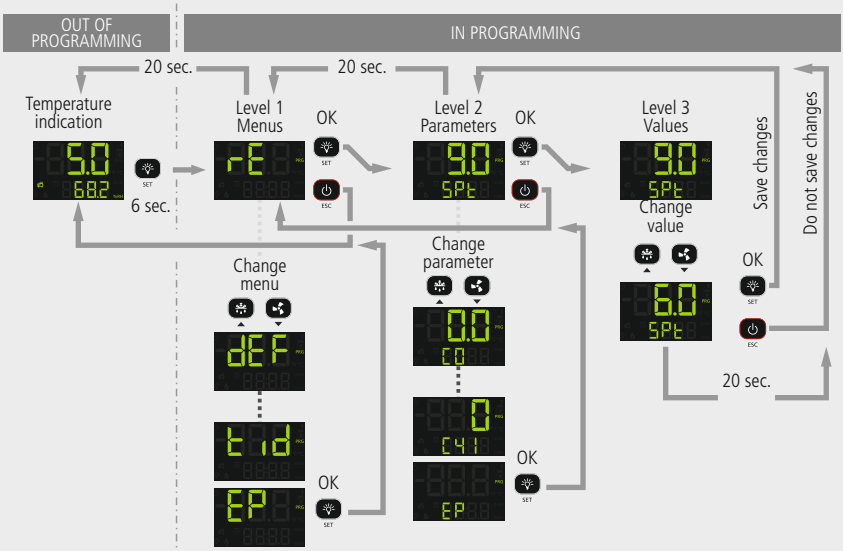

Parameters

Level 1	Level 2	Temperature regulation and control				
		Description	Values	Min.	Def.	Max.
rE	SPt	Temperature setting (Set Point)	°C/°F	-50	9.0	99
	C0	Probe 1 calibration (Offset)	°C/°F	-5.0	0.0	5.0
	C1	Probe 1 differential (Hysteresis)	°C/°F	0.2	2.0	20.0
	C2	Set Point top locking (it cannot be set above this value)	°C/°F	C3	20	99
	C3	Set Point bottom locking (it cannot be set below this value)	°C/°F	-50	0	C2
	C4	Type of delay for the protection of the compressor: **0**=Minimum time of compressor in OFF **1**=Minimum time of compressor in OFF and in ON in each cycle		0	0	1
	C5	Protection delay time (Value of the option selected in parameter C4)	Min.	0	0	120
	C6	COOL relay status with fault in probe 1: **0**=OFF; **1**=ON; **2**=ON-OFF according to prog. C7 and C8		0	0	2
	C7	Relay time in ON in the event of probe 1 failure (If C7=0 and C8≠0, the relay will always be disconnected in OFF)	Min.	0	10	120
	C8	Relay time in OFF in the event of probe 1 failure (If C8=0 and C7≠0, the relay will always be connected in ON)	Min.	0	5	120
	C19	Maximum start time from Pump Down (Values between 1 and 9 seconds will not be accepted) (**0**=deactivated)	Sec.	0	0	120
	C20	Maximum time for pump down (**0**= deactivated)	Min.	0	0	15
	C21	Probe to be viewed in the upper line of the display **0**=All probes (sequential) **1**=Probe 1 (Chamber) **2**=Probe 2 (Evaporator) **3**=Probe 3 (According to **I30**)		0	1	3
	C22	Stop fans and compressor on opening door **0**=No **1**=Yes		0	0	1
	C23	Start-up delay for fans and compressor with door open	Min.	0	0	999
	C26	Probe 3 calibration (Offset)	°C/°F	-20.0	0.0	20.0
	C40	Frequency of air extraction cycles (time between starts) (Only if **o80** or **o81**=1) (0=Only keypad activation)	h.	0	0	24
	C41	Duration of air extraction cycles (**0**=deactivated)	Min.	0	0	600
	EP	Exit to level 1				

Moisture regulation and control

Level 1	Level 2	Description	Values	Min.	Def.	Max.
rH	SPH	Moisture setting (Moisture set point)	% RH	30	85	100
	rH00	Moisture probe calibration (Offset)	% RH	-10	0	10
	rH01	Moisture probe differential (Hysteresis)	% RH	0.5	5	100
	rH02	Upper locking of SPH (it cannot be set above this value)	% RH	rH03	100	100
	rH03	Lower locking of SPH (it cannot be set below this value)	% RH	30	30	rH02
	rH04	Humidifier active during defrost **0**= No **1**=Yes		0	0	1
	rH05	Maximum time for dehumidifier to be ON. From this value onwards, cold is activated to reduce moisture (**0**=Cold is not activated for this function)	Min.	0	0	240
	rH06	Maximum time for heat provision via hot gas until resistors are activated.	Min.	0	0	240
	rH07	Dehumidification function: 0 = Enabled, 1 = Disabled		0	0	1
	EP	Exit to level 1				

Defrost

Level 1	Level 2	Description	Values	Min.	Def.	Max.
dEF	d0	Defrost frequency (Time between 2 starts)	H.	0	6	96
	d1	Maximum defrost duration (**0**=defrost deactivated)	Min.	0	*	255
	d2	Type of message during the defrost: **0**=Displays the real temperature; **1**=Displays the temperature at the start of the defrost; **2**=Displays the dEF message		0	2	2
	d3	Maximum duration of the message (Time added at the end of the defrost process)	Min.	0	5	255
	d4	Final defrost temperature (via probe 2, **I00**=2)	°C/°F	-50	8.0	C2
	d5	Defrost on connecting the unit: **0**=NO First defrost according to d0; **1**=YES, First defrost according to d6		0	0	1
	d6	Delay of the defrost start on connecting the unit	Min.	0	0	255
➤	d7	Type of defrost: **0**=Resistors; **1**=Air/fans **2**=Deactivated **3**= Hot Gas (condensing unit) **4**= Hot Gas (Cycle reversal)		0	*	4
	d8	Count of time between defrost periods: **0**=Total real time **1** =Sum of compressor connected time		0	0	1
	d9	Drip time when completing defrost (Shutdown of compressor and fans)	Min.	0	1	255
	EP	Exit to level 1				

* According to wizard.

➤ It can only be modified using the configuration wizard (In1/In2).

Evaporator fans

Level 1	Level 2	Description	Values	Min.	Def.	Max.
FAn	F0	Fan stop temperature via probe 2	°C/°F	-50	45	50
	F1	Probe 2 differential (Hysteresis)	°C/°F	0.1	2.0	20.0
	F2	Shut down fans when the compressor shuts down **0**=No **1**=Yes		0	0	1
	F3	Status of the fans during the defrost **0**=Shut down; **1**=Running		0	*	1
	F4	Delay of start-up after defrost (If F3=0) It will only actuate if it is higher than **d9**	Min.	0	2	99
	F10	Maximum time permitted for fans to be off. (Anti-stratification function) (**0**=Disabled)	Min.	0	0	360
	F11	Duration of anti-stratification function	Sec.	0	0	900
	EP	Exit to level 1				

Alarms

Level 1	Level 2	Description	Values	Min.	Def.	Max.
AL	A0	Configuration of the temperature alarms **0**=Relative to SP **1**=Absolute		0	0	1
	A1	Maximum temperature alarm in probe 1 (it must be higher than the SPt)	°C/°F	A2	20	99
	A2	Minimum temperature alarm in probe 1 (it must be lower than the SPt)	°C/°F	-50	-50	A1
	A3	Delay of temperature and moisture alarms during start-up	Min.	0	0	120
	A4	Delay of temperature and moisture alarms after the end of a defrost	Min.	0	0	99
	A5	Delay of temperature alarms from when the **A1** or **A2** value is reached		0	30	99
	A6	Delay of the external alarm/Severe external alarm on receiving a signal in digital input (**I10** or **I20** =2 or 3)	Min.	0	0	120
	A7	Delay of external alarm deactivation/Severe external alarm deactivation when the signal in digital input disappears (**I10** or **I20**=2 or 3)	Min.	0	0	120
	A8	Show warning if the defrost ends for maximum time **0**=No **1**=Yes		0	0	1
	A9	Relay alarm polarity **0**= Relay ON in alarm (OFF without alarm); **1**= Relay OFF in alarm (ON without alarm)		0	0	1
	A10	Differential of temperature alarms (**A1** and **A2**)	°C/°F	0.1	1.0	20.0
	A12	Delay of open door alarm (If **I10** or **I20**=1)	Min.	0	10	120
	A20	Configuration of moisture alarms **0**=Relative to SP **1**=Absolute		0	0	1
	A21	Maximum moisture alarm (it must be higher than the SPH)	% HR	A22	20	100
	A22	Minimum moisture alarm (it must be lower than the SPH)	% HR	-50	-40	A21
	A23	Differential of moisture alarms (**A21** and **A22**)	% HR	0.1	2	20
	A24	Delay of moisture alarms from when **A21** or **A22** are reached	Min.	0	30	99
	EP	Exit to level 1				

* According to wizard.

Basic configuration

Level 1	Level 2	Description	Values	Min.	Def.	Max.
bcn	b00	Delay of all functions on receiving power supply	Min.	0	0	255
	b01	Cold room light timing	Min.	0	0	999
	b10	Function of password **0**=Inactive **1**=Block access to parameters **2**=Block keypad		0	0	2
	PAS	Access code (Password)		0	0	99
	b20	MODBUS address		1	1	247
	b21	Communication speed: **0**=9600 bps **1**=19200 bps **2**=38400 bps **3**=57600 bps	bps	0	0	3
	b22	Acoustic alarm enabled **0**= No **1**=Yes		0	1	1
	b23	Lower display function **0**=Shows moisture **1**=Shows the time (**1**) **2**=Shows moisture and the time alternately (**1**)		0	0	2
	Unt	Work units **0**=ºC **1**=ºF		0	0	1
	EP	Exit to level 1				

Inputs and outputs

Level 1	Level 2	Description	Values	Min.	Def.	Max.
in0	i00	Connected probes **1**=Probes S1 and SH (Cold room temperature + moisture) **2**=Probes S1, S2 and SH (Cold room temp. + evaporator temp. + moisture) **3** = S1 Probe (Chamber temp.) **4** = S1 and S2 Probes (Chamber temp. + Evaporator temp.)		1	2	4
	i10	Configuration of digital input 1 **0**= Deactivated **1**=Door contact **2**=External alarm **3**=Severe external alarm **4**=Temp. control selector / temp. + moist. **5**=Low pressure switch **6**=Remote Stand-by		0	*	6
	i11	Polarity of the digital input 1 **0**=Activates on closing contact; **1**=Activates on opening contact		0	*	1
	i20	Configuration of digital input 2 **0**= Deactivated **1**=Door contac **2**=External alarm **3**=Severe external alarm **4**= Temp. control selector / temp. + moist. **5**=High pressure switch for Hot Gas **6**=Remote Stand-by		0	*	6
	i21	Polarity of the digital input 2 **0**=Activates on closing contact; **1**=Activates on opening contact		0	*	1
	i30	Configuration of input 3 **0**= Deactivated **1**= Door contac **2**= External alarm **3**= Severe external alarm **4**= Temp. control selector / temp. + moist. **5**= Log temperature **6**= Product temperature (HACCP alarm control) **7**= Standby remote activation **8**= High pressure switch (Defrost Condenser using Hot Gas)		0	*	8
	i31	Polarity of the input 3 **0**=Activates on closing contact; **1**=Activates on opening contact		0	0	1
	o00	Configuration of relay AUX1 **0**=Deactivated **1**=Compressor/Resistor sump **2**=Light **3**=Virtual control **4**=Same status as COOL relay **5**=Same status as unit		0	*	5

* According to wizard. **(1)** Only available with the CAMM module installed.

Inputs and outputs

Level 1	Level 2	Description	Values	Min.	Def.	Max.
in	o10	Configuration of relay AUX2 **0**=Deactivated **1**=Alarm **2**=Light **3**=Virtual control **4**=Solenoid for Hot Gas		0	*	4
➤	o20	Configuration of relay AUX3 **0**=Deactivated **1**=Heat resistor **2**=Dehumidifier		0	*	2
	o80	Configuration of DEF relay **0**=Deactivated **1**=Extractor fan **2**=Defrost		0	*	2
	o81	HUMID. relay configuration **0**=Deactivated **1**=Extractor fan **2**=Humidifier		0	*	2
	o90	Analogue output type (AN. OUT) **0**=4-20 mA **1**=0-10 V		0	0	1
	o91	P proportional constant of analogue output		1	20	100
	o92	I integral constant of analogue output		1	5	200
	EP	Exit to level 1				

HACCP alarm

Level 1	Level 2	Description	Values	Min.	Def.	Max.
HCP	h1	Maximum temperature of HACCP alarm	ºC/ºF	-50	99	99
	h2	Maximum permitted time for activation of the HACCP alarm (**0**=Disabled)	H.	0	0	255
	EP	Exit to level 1				

Logger (Only with CAMM module)

Level 1	Level 2	Description	Values	Min.	Def.	Max.
dLG	L1	Log interval **0**=1 min. **1**=5 min. **2**=15 min. **3**=30 min. **4**=60 min.		0	2	4
	L2	Delete record and event log **0**=No **1**=Yes		0	0	1
	L3	Record start day **0**=Monday **1**=Tuesday **2**=Wednesday **3**=Thursday **4**=Friday **5**=Saturday **6**=Sunday		0	0	6
	L4	Decimal separator for the .cvs file **0**=, **1**=.		0	0	1
	EP	Exit to level 1				

* According to wizard.

➤ It can only be modified using the configuration wizard (In1/In2).

Information (Reading only)

Level 1	Level 2	Description	Values	Min.	Def.	Max.
ti d	In1	Option chosen in the In1 configuration wizard				
	In2	Option chosen in the In2 configuration wizard				
➤	Pd	Pump down active? **0**=No **1**=Yes		0	*	1
	PU	Programme version				
	Pr	Programme revision				
	bU	Bootloader version				
	br	Bootloader revision				
	PRr	Parameter map revision				
	EP	Exit to level 1				

* According to wizard.

➤ It can only be modified using the configuration wizard (In1/In2).

Connectivity

The controllers are equipped with a port for connection of RS485 (MODBUS) data, which allows for remote management of these using an **AKO-5012** web-server.

The MODBUS address is factory-set and is indicated on the rating plate located on the left side of the controller. This address must be different for each unit within the same network. The address can be changed using parameter **b20**. Once modified, the old address indicated on the plate will not be valid.

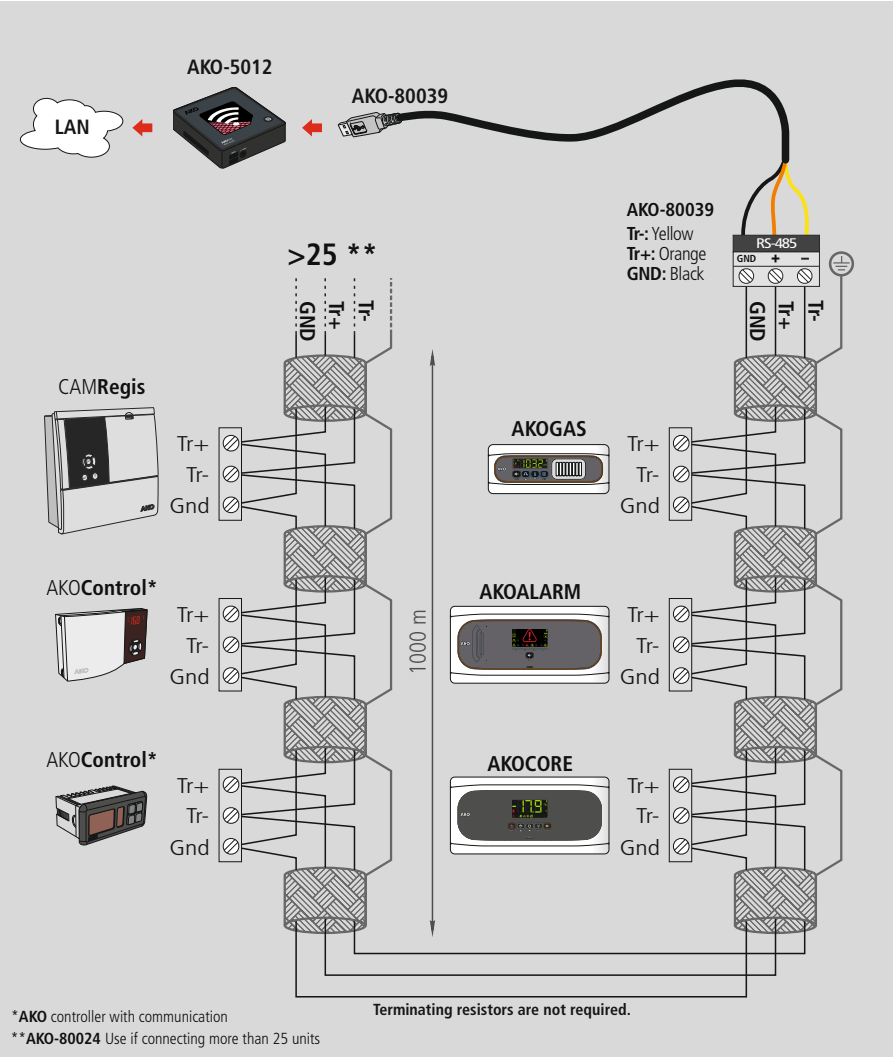

Technical specifications

Power supply .....120 - 240 V ~ , 50 / 60 Hz
Maximum input power in the operation.....10 VA at 240 V~
Maximum nominal current.....15 A
Relay DEF. - SPDT - 20 A NO ..... (EN60730-1: 15 (15) A 250 V~)
NC .....(EN60730-1: 15 (13) A 250 V~)
Relay FAN - SPST - 16 A .....(EN60730-1: 12 (9) A 250 V~)
Relay COOL - SPST - 16 A.....(EN60730-1: 12 (9) A 250 V~)
Relay HUMID - SPST - 16 A.....(EN60730-1: 12 (9) A 250 V~)
Relay AUX 1 / H.CRANK. - SPDT - 20 A NO .....(EN60730-1: 15 (15) A 250 V~)
NC.....(EN60730-1: 15 (13) A 250 V~)
Relay AUX 2 - SPDT - 16 A NO.....(EN60730-1: 12 (9) A 250 V~)
NC.....(EN60730-1: 10 (8) A 250 V~)
Relay AUX 3 - SPST - 16 A .....(EN60730-1: 12 (9) A 250 V~)
No. of relay operations .....EN60730-1:100.000 operations
Probe temperature range.....-50.0 ºC to 99.9 ºC
Resolution, setting and differential .....0.1 ºC
Thermometric precision.....±1 ºC
Loading tolerance of the NTC probe at 25 °C.....±0.4 ºC
Input for NTC probe AKO-14901
Working ambient temperature.....-10 ºC to 50 ºC
Storage ambient temperature .....-30 ºC to 60 ºC
Protection degree .....IP 65
Installation category .....II s/ EN 60730-1
Pollution degree .....II s/ EN 60730-1

Control device classification: Built-in assembly, with Type 1.B automatic operation action feature, for use in clean situations, logical support (Software) class A and continuous operation. Degree of contamination 2 acc. to UNE-EN 60730-1.

Double isolation between power supply, secondary circuit and relay output.
Temperature during ball-pressure test Accessible parts .....75 ºC
Parts which position active elements .....125 ºC
Current of radio jamming supression tests .....270 mA
Voltage and current as per EMC tests:.....207 V, 17 mA
Type of assembly.....Fixed internal
MODBUS address.....Shown on label
Dimensions.....290 mm (W) x 141 mm (H) x 84.4 mm (D)
Internal buzzer

Accessories

AKO-58500 CAMM Module

Together with the application for mobile devices, this module provides the unit with multiple functionalities:

- Data logging
- Logging of configuration changes
- Remote configuration
- Clock functions in real time
- Activity summaries
- Logging of events and alerts
- Remote control of functions

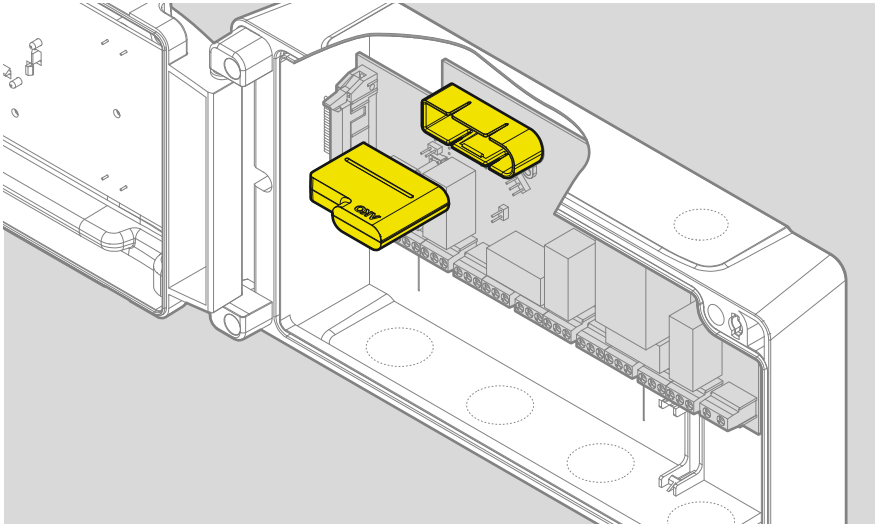

AKO ELECTROMECÁNICA , S.A.
Avda. Roquetes, 30-38
08812 • Sant Pere de Ribes.
Barcelona • Spain.

www.ako.com

351662402 REV.11 2024

We reserve the right to supply materials that might vary slightly to those described in our Technical Sheets. Updated information is available on our website.