AKO

en 5850H002 Ed.03

CE AKO-58500

CAMM Module

Coldroom Activity & Maintenance Module

Functionality

The **CAMM** module provides compatible devices of the AKOGAS and AKOCORE range with dozens of functions in combination with the applications (app) for AKO CAMM Tool / AKO CAMM Fit mobile devices:

Data logging: Periodically saves analogue values of the different sensors (temperature, moisture, gas concentration and other variables).

Logging of configuration changes: Saves in memory any change made to the configuration of both the device and the CAMM module itself.

Logging of events and alarms: Saves in the memory changes of status that occur in the device (alarms, door opening, activation of the light, etc.)

Activity log: Saves operating and usage statistics of the device and calculates trends.

Remote configuration: Allows varying the configuration of the device using the app.

Clock functions in real time: Provides the device it is installed in with clock functions in real time (program defrosts or Set Point changes).

Remote control of functions: Allows controlling the different functions of each remote device using the app.

Configuration of devices before their installation: Allows configuring the parameters of a compatible device before its installation using an app.

Remote assistance: Allows giving control of a device with CAMM module to another person located far from the installation. Two mobiles are needed with the app, one must be connected to the device via Bluetooth and both must have an Internet connection.

The type of data saved in the different logging functions depends on the device they are installed in.

Description

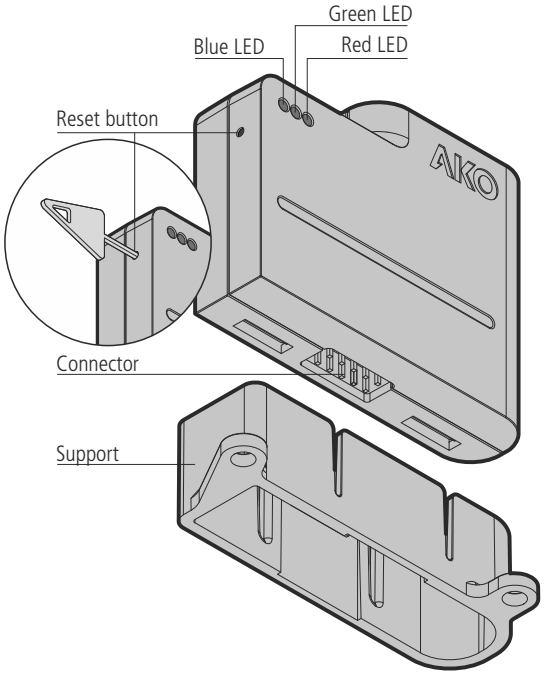

Blue LED

Indicates Bluetooth communication status:

Switched off: Communication inactive.
Flashing: Communication active and waiting for link.
Constant: The module is linked to the app.

Green LED

Indicates battery status:

Constant: Battery level above 80%
Quick flashing: Battery level between 30% and 80%
Slow flashing: Battery level below 30%
Switched off: Low battery

Red LED

Indicates an operating error of the module

Flashing: Indicates an operating error in the logging function, the module is not logging. This may be due to two reasons:

Error in the date/time configuration: The date/time configuration must be carried out using the app or via AKONet.

Data saved in another device: The module cannot store data logged from two different devices simultaneously. To use the logging functions, make sure that the module does not contain logged data of another device. The app should be used to download and delete data.

Constant: Indicates a general operating error, the firmware must be upgraded.

Reset button

Pressing once briefly (< 1 second) activates Bluetooth communication and displays the battery status.
Pressing for more than 3 seconds restarts the module. The three LEDs flash quickly to confirm the action.
If Bluetooth communication is active, it disconnects it.

Unsaved activity logs are lost.

Pressing for over 10 seconds returns to factory settings thereby deleting all configuration data. The three LEDs turn on one by one during the process. At the end, they flash quickly and the module reboots.

The date and time are maintained.

Use the key included to activate the reset button.

Installation

Disconnect the power supply before doing anything inside the device.

Installation in alarm stations and controllers.

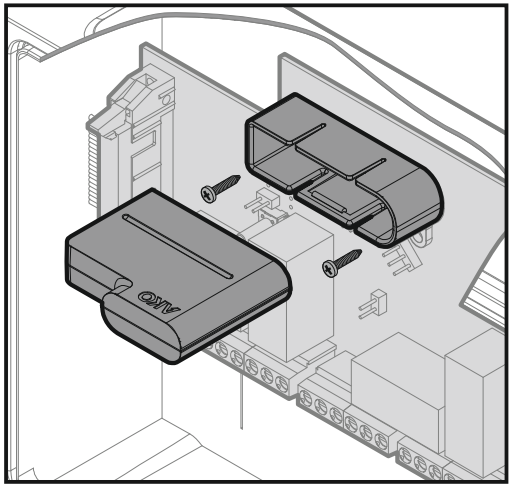

Installation in gas transmitters.

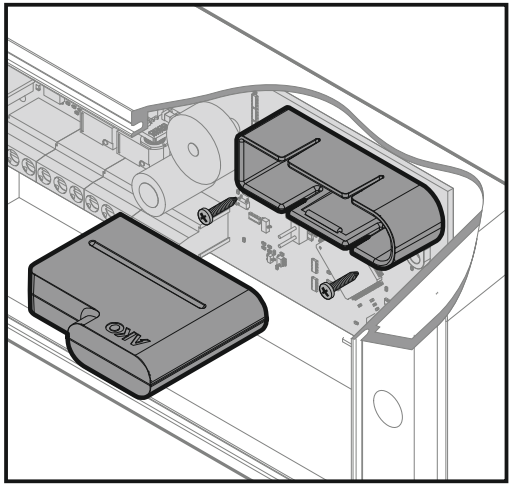

AKO ELECTROMECÁNICA , S.A.L.
Avda. Roquetes, 30-38
08812 • Sant Pere de Ribes.
Barcelona • Spain.

www.ako.com

355850002 Rev 02 2023

We reserve the right to supply materials that might vary slightly to those described in our Technical Sheets. Updated information is available on our website.

Operating modes

The CAMM **AKO-58500** module has 2 possible operating modes:

Independent operation *

The module is not installed in any device.

Functions:

- Download data
- Change configuration of the module
- Update the firmware

To link it to the app, activate communication by pressing the reset button and start the linking process with the app.

> ℹ If the link is not completed, communication deactivates after 1 minute.

Connected to a device

Device without power supply *

The module is installed in a device, but the latter does not have power supply (device not installed).

Functions:

- Download data
- Change configuration of the module
- Change configuration of the device
- Update the firmware
- HACCP logging**

When the module is inserted in the device, communication activates automatically. If the module has already been inserted, activate communication by pressing the reset button and start the linking process with the app.

> ℹ If the link is not completed, communication deactivates after 1 minute.

Device with external power supply

The module is installed in a device operating with external power supply.

Functions:

- Download data
- Change configuration of the module
- Change configuration of the device
- Remote control of functions
- Update the firmware
- Extending the device's functions:
  - Data loggin
  - Logging of configuration changes
  - Logging of events and alarm
  - Activity log
  - HACCP logging**
  - Clock functions in real time*

Communication is active while there is external power supply, start the linking process with the app at any time.

> ℹ If the device is powered using its internal battery (fault in the power supply) communication is disabled.

* If communication between the app and the module remains inactive for over 5 minutes, communication is interrupted and the linking process will have to be started again.

** Only in devices with HACCP function.

Link with the AKO CAMM Tool / AKO CAMM Fit application

> ℹ The use of both applications requires logging in with a valid email.
> After 1 minute without activity between the application and the CAMM module, communication is disconnected, to re-establish it, return to screen "Device list" and press the ↻ button.

1 Open app AKO CAMM Tool / AKO CAMM Fit in your mobile and enter the access data.

2 The app makes a device search and displays the results on screen.

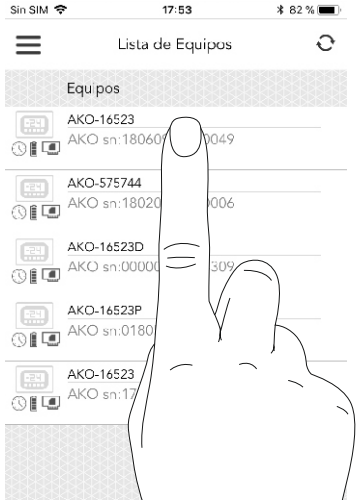

Choose the device you want, in a few seconds the app requests the Bluetooth link code (by default **123456**).

3 After a few seconds, the app displays the screen of the device chosen, communication has been established correctly.

> ℹ Some Android devices, during the linking process, may tell the user to access settings / Bluetooth and link from there, looking for the device via its serial number.

Battery

The CAMM module uses its internal battery in the following cases:

- On activating communication of the module if it is not connected to any device, or if it is connected to a device without external power supply.
- When communication is not active, the battery is used for maintaining the date / time and unsaved operating and usage statistics.

With the battery charged 100%, the battery life is 4 months with inactive communication and 4 hours in constant communication with the app.

The battery automatically charges when the module is installed in a device with external power supply.

Declaration of Conformity

AKO Electromecánica S.A.L. hereby declares that the type of radioelectric device AKO-58500 (CAMM Module) is in accordance with Directive 2014/53/EU.

The full text of the EU conformity declaration is available at the following Internet address:

http://help.ako.com/assets/uploads/3669.pdf

Technical specifications

External power supply		5 Vdc
Internal power supply		Battery Li-Ion 3.7 V 100 mAh
Maximum consumption		50 mA
Battery range:	On stand-by	4 months
	In communication	4 hours
Working ambient temperature		-30 °C to 50 °C
Storage ambient temperature		-20 °C to 60 °C
Range of moisture permitted		0 - 95 % HR (Without condensation)
Bluetooth frequency bands		2400 Mhz a 2483.5 Mhz
Maximum Bluetooth RF power		< 10 dBm
Dimensions (without support)		46 mm (W) x 36.5 mm (H) x 12.2 mm (D)
Compatible with the apps:		AKO CAMM Tool / AKO CAMM Fit