AKO 5981H062 Ed.07 (en)

CE Instructions

AKO-59810 **AKO-59820**
AKO-59811 **AKO-59821**

V2

Description

Temperature and moisture monitor with built-in NBIoT communication. Logs temperature and moisture data and transmits it to the cloud (akonet.cloud). Both the configuration and monitoring of the data are carried out in the cloud itself.

Display and analysis of the logged data

Both the display of the logged data and the device configuration must be done in the akonet.cloud. portal.
The portal also allows you to analyse the stored data using graphs, statistics and operating indicators. For more information visit akonet.cloud.

Simplified declaration of conformity

AKO Electromecánica S.A. hereby declares that the radioelectric device types **AKO-5981x / AKO-5982x** (Temperature and moisture monitor) conform to the provisions set forth by Directive 2014/53/EU.
The full text of the EU conformity declaration is available at the following internet address:
http://help.ako.com/manuales/declaracion-ue-de-conformidad

Warnings

-If the device is used without adhering to the manufacturer's instructions, the device safety requirements could be compromised. Only probes supplied by AKO should be used for the appliance to operate correctly.
-The device should be installed in a place protected from vibrations, water and corrosive gases, where the ambient temperature does not exceed the value indicated in the technical data.
-During cleaning or maintenance, avoid using detergents on the device.
-For the reading to be correct, the probe should be used in a place without heat influences apart from the temperature you want to measure or control.
-Avoid installing the device on metal walls or near devices that may cause radio emissions.
-**AKO-59811x / 59821x** devices should **NEVER** be operated without installing the external antenna.
-This device can be fitted with any antenna provided it has a gain of less than 9.2 dBi and there is a minimum distance between it and any person or animal of more than 20 cm.
-This device must always be installed in an area where a minimum distance of 20 cm from the human body is ensured, to guarantee compliance with human exposure to electromagnetic fields.
-Any type of antenna used with the equipment must comply with the limits established in the radio interface of the member estates and the following documents: Commission Decision 2010/267/EU of 6 May 2010, ECC Decision (09)03 of 30 October 2009 and CEPT Report 30 of 30 October 2009.
-This device is powered by a non-rechargeable battery, if it runs out it must be replaced with the model **AKO-59830**. The dead battery cannot be disposed of with household waste, it must be taken to a select collection point. **NEVER try to recharge the battery, perforate or hit the battery or immerse it in liquids or dispose of the battery with fire.**

Installation

Installation conditions: Install the device away from draughts and condensation. Do not locate it close to evaporators, condensers or other items that may produce electromagnetic noise. If it is installed in a chamber, locate it as close as possible to the door. If it is installed inside a cabinet or any other piece of furniture, locate it as close as possible to its door.

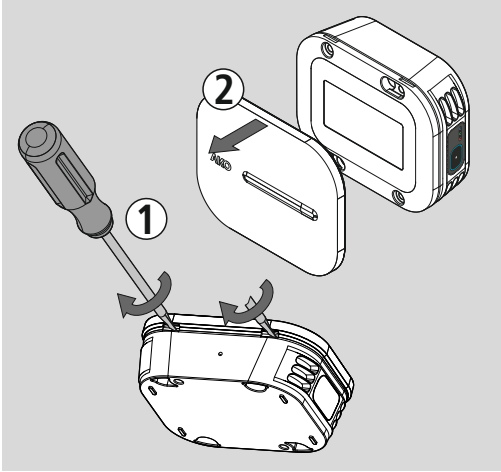

Option A
Fixing by screws

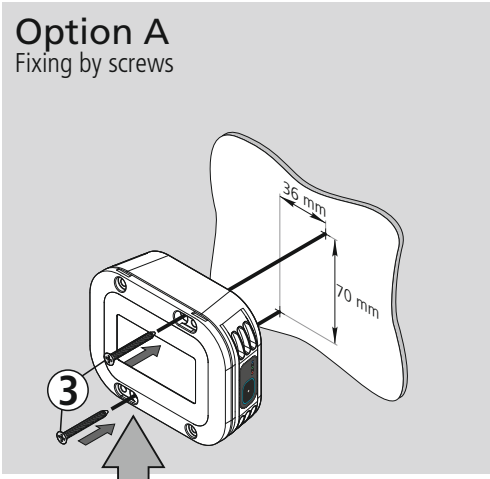

Option B
Fixing by adhesive

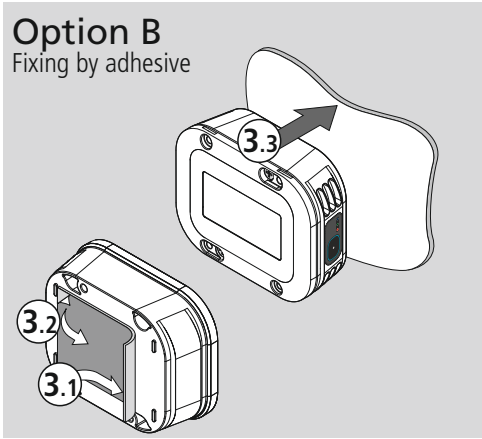

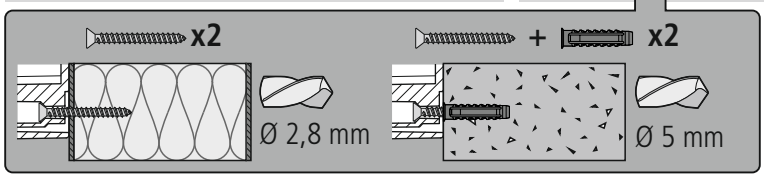

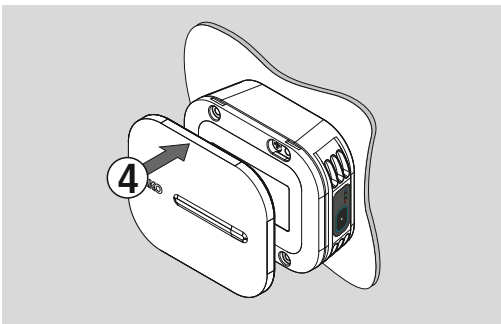

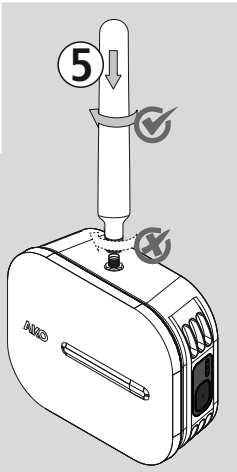

Only
AKO-59811x /
AKO-59821x

akonet.cloud

AKO ELECTROMECÁNICA , S.A.
Avda. Roquetes, 30-38
08812 • Sant Pere de Ribes.
Barcelona • Spain.
www.ako.com

3559810 62 REV.06 2025

We reserve the right to supply materials which may be slightly different from those described in our Data Sheets. Updated information on our web.

Activation of the device

www.akonet.cloud

Before activating the device, make sure that there is enough reception at the installation location. **Activated devices may not be returned.**

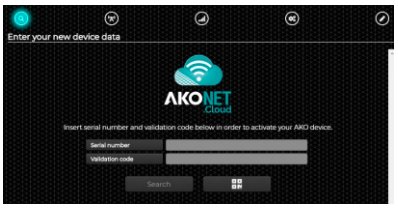

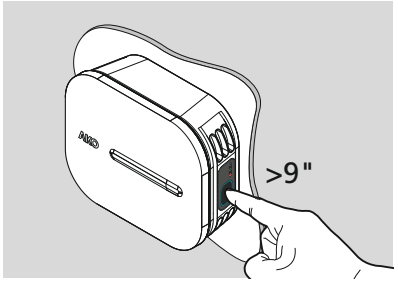

1.-Access akonet.cloud (requires registration).

2.-Register the new device by pressing and following one of these two methods:

- Manually enter the serial no. and the activation code that appear on the device's label.
- Press and capture the QR code of the device's label (requires that the PC or mobile device used for accessing akonet.cloud has a camera).

3.-Once both steps have been completed, activate the device by pressing the pushbutton for 9 seconds. The 3 indicator lights flash.

4.-Wait until the process has finished (approximately 3 min). If the green LED lights up, transmission is OK and the device has been activated correctly. If the red LED lights up, transmission has failed. The device will make 2 more attempts in the course of 1 hour and will try again once a day. If the problem persists, check coverage in your area or change the location of the device.

Operation

Pushbutton

Long press (> 9 sec.): Activate the initial start-up of the device. This should only be done after registering in akonet.cloud. When activated, the 3 indicators flash and during transmission the blue indicator flashes.

Medium press (> 3 sec.): Forces data transmission to akonet.cloud. When it wakes up, the 3 indicators flash and during transmission the blue indicator flashes.

Short press (< 3 sec.): Displays the status of the battery with the green indicator:

ON: Battery OK

Flashing: Low battery, replace as soon as possible.

Indicators

Display the status of the device only after a medium press (forced transmission), the rest of the time they remain off.

RED

Flashing: An error has been detected in the operation, after 3 seconds the indicator turns off.

Constant: The transmission could not be carried out, review the coverage, after 3 seconds the indicator turns off.

GREEN

At the end of a transmission, it indicates the level of current coverage:

Constant: Good signal quality

Flashing: Medium signal quality

Flash: Poor signal quality

After 3 seconds the indicator turns off.

BLUE

Flashing: Transmission in progress

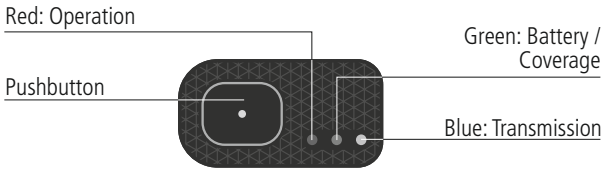

Logging and sending data

The device is shipped from the factory in an inactive state, therefore it does not transmit or log any information until it is activated (see "Registering the device").

Once active, the device logs the temperature, moisture, alarms and external probe temperature (depending on model) data at regular intervals. The time between each log is defined by the option "L2 - Data logger interval frequency" under the heading "Parameters / dlG - Datalogger" of akonet.cloud.

The sending of logged data to akonet.cloud takes place when it meets one of the following criteria:

- The elapsed time defined using the "Tx - Cloud transmission interval", defined in paragraph "Parameters / nb - Narrowband", has run out.
- An alarm has been detected with forced transmission configuration.
- A transmission has been forced with a medium press.

For more information on the operation of akonet.cloud and on how to configure the device, consult manuals 5000H001 and 5000H011 respectively. These are available on our website www.ako.com.

Technical specifications

Power supply ..... Battery LiSOCI2, 3.6 Vdc, 6.5 Ah

Estimated life of the battery ..... up to 8 years*

Measuring range
- Internal temperature probe ..... -40 to 50 °C
- External temperature probe ..... -50 to 50 °C
- Moisture ..... 0 to 100 %

Resolution
- Temperature ..... 0.1 °C
- Moisture ..... 0.1 % RH

Precision
- Internal temperature probe ..... -40 to 0 °C: ± 1 °C
- ..... 0 to 50 °C: ± 0.5 °C
- External temperature probe ..... ± 1 °C
- Moisture ..... 20 to 80 % RH: ± 3 %
- Rest: ..... ± 10 %

Working ambient temperature ..... -40 to 50 °C

Storage ambient temperature ..... -40 a 60 °C, recommended +30 °C

Range of moisture permitted ..... 0 - 100 % RH (without condensation)

Protection degree
- **AKO-59810x / 59820x** IP68
- **AKO-59811x / 59821x** IP65

Bands ..... NBIoT (Narrow band) LTE Cat NB1 | B2, B3, B4, B8, B12, B13, B20

Band	Frequency Rx	Frequency Tx
2	1930 MHz ~ 1990 MHz	1850 MHz ~ 1910 MHz
3	1805 MHz ~ 1880 MHz	1710 MHz ~ 1785 MHz
4	2110 MHz ~ 2155 MHz	1710 MHz ~ 1755 MHz
8	925 MHz ~ 960 MHz	880 MHz ~ 915 MHz
12	729 MHz ~ 746 MHz	699 MHz ~ 716 MHz
13	746 MHz ~ 756 MHz	777 MHz ~ 787 MHz
20	791 MHz ~ 821 MHz	832 MHz ~ 862 MHz

Maximum transmission power ..... 23.5 dBm conducida

Antenna
- **AKO-59810x / 59820x** ..... Internal
- **AKO-59811x / 59821x** ..... External

Dimensions ..... 107 mm (W) x 85 mm (H) x 39 mm (D)

*Battery life may vary depending on the ambient temperature, the level of coverage and the configuration of the device.