AKO

en 1461H032 Ed.04

Installation instructions

AKO-D1460x **AKO-D1461x** **AKO-D1462x**
AKO-D1463x **AKO-D1464x** **AKO-D146xx-C**

Warnings

-Using the equipment without following the manufacturer's instructions may affect the device's safety requirements. To ensure that the device operates correctly, only probes supplied by AKO should be used.
-The unit must be installed in a location protected from vibrations, water and corrosive gases, where the ambient temperature does not exceed that shown in the technical data.
-To ensure a correct reading, the probe must be situated in a location without any external heat influences except for the temperature which is being measured or controlled.
-The power supply circuit must be provided with a main switch rated at at least 2 A, 230 V, located close to the equipment. The cables will enter through the back and should be type H05VV-F or H05V-K.
-The gauge will depend on local regulations, but should in no case be less than 1 mm^2.
-Connecting wires for the relay contacts should be sized 2.5 mm^2.
-Between -40 ºC and +20 ºC, if the probe NTC is prolonged till 1.000 m with a mínimum of cable 0,5 mm^2, the maximum deviation will be of 0,25 ºC (extension cable for probe ref. **AKO-15586**)
NOTE: Equipment not compatible with **AKO-14917** (external communication module) and **AKO-14918** (programming key)

Installation

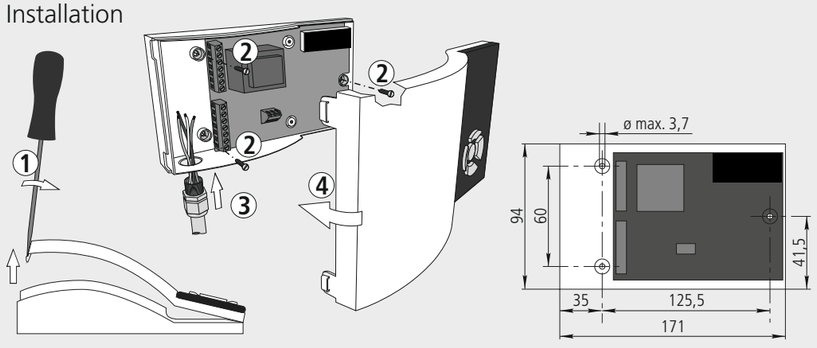

Operation

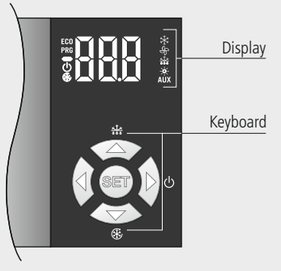

[1]:In **AKO-D1461x / D1462x,** if P0=0
[2]:In **AKO-D1461x / D1462x,** if P0=1

Press for 5 seconds, allows changing the set point (SP). (Not available in thermometers)
Pressing for 10 seconds goes to the programming menu.
In the programming menu, go to the level displayed or accept the new value while setting a parameter.

Pressing for 5 seconds starts/stops defrosting. (Not available in thermometers)
The programming menu, allows you to scroll through the various levels or, during the setting of a parameter, to change the value.

Press for 5 seconds to start/stop Fast Freezing mode (rapid cooling). (Function available depending on the model).
The programming menu, allows you to scroll through the various levels or, during the setting of a parameter, to change the value.

Pressing for 5 seconds activates Standby mode, pressing for 2 seconds returns the equipment to normal mode. In Standby mode, the equipment performs no actions and only the indicator is displayed on the screen ⏻.
In the programming menu, go to the level displayed.

Pressing it for 1 second, activates or deactivates the cold room light (if P6=3). This function stays active although the unit is in the stand-by mode. (Function available depending on the model).
In the programming menu, exit without saving parameter, return to previous level or exit programming.

Wiring

The probe and its cable should **NEVER** be installed in the same conduit as power, control or supply cables.

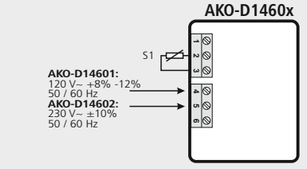

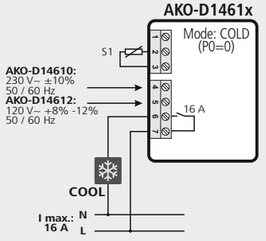

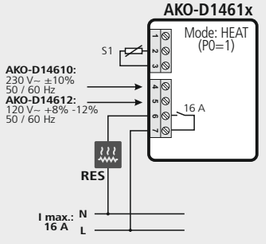

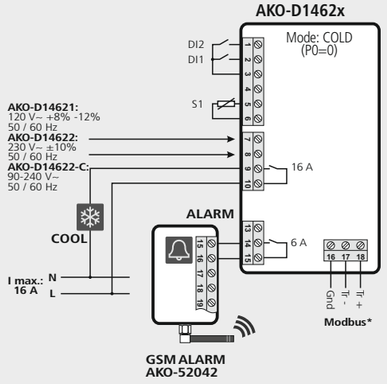

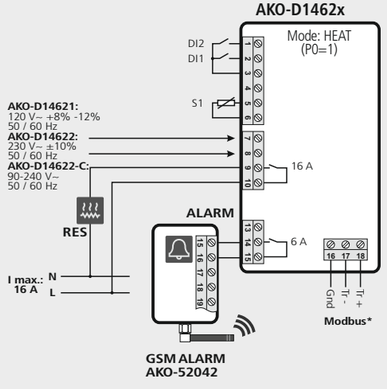

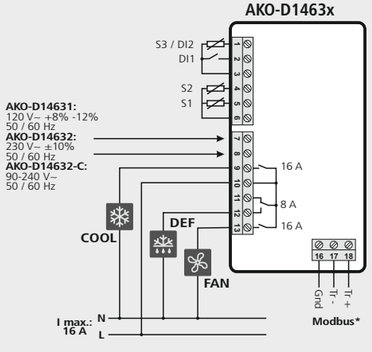

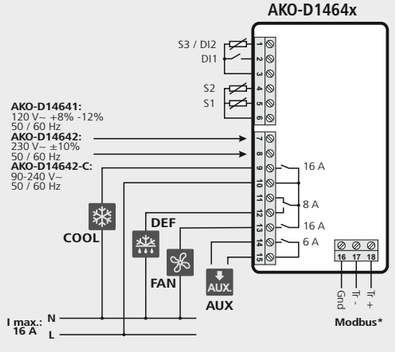

* Depending on model

AUX Relay Function as per parameter P6

S1: Probe 1, temperature in the chamber or cabinet.
S2: Probe 2, defrost.
S3: Probe 3, temperature of product / 2nd defrost.
DI1/DI2: Digital Input 1 / Digital Input 2.

Start-up

AKO-D1461x / AKO-D1462x

On power-up, the equipment will start up in Wizard mode (Inl / 1 flashing), press ▲ or ▼ to select the most appropriate application and press **SET**.

1: Chilling **2**: AC **3**: Heat/Incubators

The wizard will configure the parameters of the equipment for the chosen application (see table).

	WIZARD			
	SP	d0	d1	P0
Inl=1: Chilling	0	6	20	0
Inl=2: AC	21	0	0	0
Inl=3: Heat/Incubators	37	-	-	1

AKO-D1463x / AKO-D1464x

On power-up, the equipment will start up in Wizard mode (Inl / 1 flashing), press ▲ or ▼ to select the most appropriate application and press **SET**.

1: Chilling **2**: Frozen **3**: Fruits and vegetables
4: Fresh fish **5**: Soft Drinks **6**: Bottle racks
7: AC

The wizard will configure the parameters of the equipment for the chosen application (see table).

	WIZARD				
	SP	d0	d1	F0	F3
Inl=1: Chilling	2	4	20	8	1
Inl=2: Frozen	-18	4	20	0	0
Inl=3: Fruits and Vegetables	10	4	20	30	1
Inl=4: Fresh fish	0	4	20	8	1
Inl=5: Soft Drinks	3	24	20	8	1
Inl=6: Bottle racks	12	24	20	30	1
Inl=7: AC	21	96	0	99	1

WARNING: The default parameters by type of application have been defined for the most common applications. Check that these parameters are suitable for your installation.

AKO ELECTROMECÁNICA, S.A.
Avda. Roquetes, 30-38
08812 • Sant Pere de Ribes.
Barcelona • Spain.
www.ako.com

351461032 REV/03 2025

We reserve the right to supply materials which may be slightly different from those described in our Data Sheets. Updated information on our web site.

Access to set point and programming

Programming Menu (parameters)

After 20 seconds with no key being pressed, the equipment will return to the previous level. If you are on level 3, the changes will not be saved.

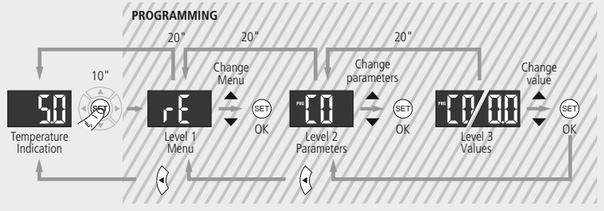

Change set point

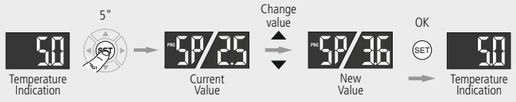

Table of parameters and messages

Def. column shows factory-set default parameters. Those marked with * are variable parameters depending on the application chosen in the wizard (see Start-up). Unless otherwise stated, temperatures are expressed in °C.

Level 1 / Level 2: AKO-D1460x, AKO-D1461x, AKO-D1462x, AKO-D1463x, AKO-D1464x

CONTROL

		Description		Values	Min.	Def.	Max.	D1460x	D1461x	D1462x	D1463x	D1464x
rE	SP	Temperature Adjustment (Set Point) (limits depending on probe type)	With NTC	(ºC / ºF)	-50.0	*	99.0	●	●	●	●	
			With PTC			-	150			●	●	
	C0	Calibrating probe 1 (Offset)		(ºC / ºF)	-20.0	0.0	20.0	●	●	●	●	●
	C1	Probe 1 differential (Histeresis)		(ºC / ºF)	0.1	2.0	20.0	●	●	●	●	
	C2	Upper blocking of the set point (cannot be set above this value)	With NTC	(ºC / ºF)	C3	99.0	99.0	●	●	●	●	
			With PTC			-	150			●	●	
	C3	Lower blocking of the set point (cannot be set below this value)		(ºC / ºF)	-50.0	-50.0	C2	●	●	●	●	
	C4	Type of delay for protection of the compressor: **0**=OFF/ON (since the last disconnection); **1**=OFF-ON/ON-OFF (since the last shut-down /start-up)			0	0	1	●	●	●	●	
	C5	Protection delay time (value of the option selected in parameter C4)		(min.)	0	0	120	●	●	●	●	
	C6	Status of COOL relay with probe fault **0**=OFF; **1**=ON; **2**=Average based on last 24 hours prior to probe fault;			0	2	2			●	●	
		Status of COOL relay with probe fault **0**=OFF; **1**=ON; **2**=Average based on last 24 hours prior to probe fault; **3**=ON-OFF as prog. C7 and C8			0	2	3	●	●			
	C7	Time relay ON in case of faulty probe (If C7=0 and C8≠0, the relay will always be OFF deenergised)		(min.)	0	10	120	●	●			
	C8	Time relay OFF in case of fault of probe 1 (If C8=0 y C7≠0, the relay will always be ON energised)		(min.)	0	5	120	●	●			
	C9	Maximum duration of fast freezing mode. (0=off)		(h.)	0	24	48	●	●			
	C10	Change set point (SP) in fast freezing mode, when it reaches this point (SP + C10) returns to normal. (SP+C10 ≥ C3) (**0**=OFF)		(ºC / ºF)	0	-50.0	C3-SP	●	●			
	C11	Length of inactivity at digital input to activate ECO mode (Only if P10 or P11=1) (0=OFF)		(h.)	0	2	24	●	●			
	C12	Change set point (SP) in ECO mode (SP+C12 ≤ C2) (**0**=off)		(ºC / ºF)	0	2	C2-SP	●	●			
	EP	Exit to Level 1						●	●	●	●	●

DEFROST (If P0=0)

		Description	Values	Min.	Def.	Max.	D1460x	D1461x	D1462x	D1463x	D1464x
dEF	d0	Defrost frequency (Time between two starts)	(h.)	0	*	96	●	●	●	●	
	d1	Maximum defrost duration (**0**=defrost deactivated)	(min.)	0	*	255	●	●	●	●	
	d2	Type of message during defrost: **0**=Current temperature; **1**=Temperature at start of defrost; **2**=Display dEF message		0	2	2	●	●	●	●	
	d3	Maximum duration of message (time added at the end of the defrost)	(min.)	0	5	255	●	●	●	●	
	d4	Defrost end temperature (probe 2) (If P4 ≠ 1)	(ºC / ºF)	-50.0	8.0	99.0	●	●			
	d5	Defrost on equipment start-up **0**=NO, First defrost as per d0, **1**=YES, First defrost as per d6		0	0	1	●	●			
	d6	Defrost start delay on equipment start-up	(min.)	0	0	255	●	●			
	d7	Defrost type: **0**=Resistors, **1**=Inverted cycle		0	0	1	●	●			
	d8	Calculated time between defrost periods: **0**=Total actual time; **1** =Sum of times the compressor is on		0	0	1	●	●			
	d9	Drip time at end of defrost (compressor and fans off) (if P4 ≠ 1)	(min.)	0	1	255	●	●			
	EP	Exit to Level 1					●	●	●	●	

FAN CONTROL (Evaporator)

		Description	Values	Min.	Def.	Max.	D1460x	D1461x	D1462x	D1463x	D1464x
FAn	F0	Fan shut-down temperature as per probe 2 (if P4 ≠ 1)	(ºC / ºF)	-50.0	*	99.0	●	●			
	F1	Probe 2 differential (If P4 ≠ 1)	(ºC / ºF)	0.1	2.0	20.0	●	●			
	F2	Stop fans when stopping compressor **0**=No, **1**=Yes		0	1	1	●	●			
	F3	Fan status during defrost: **0**=Off; **1**=On		0	*	1	●	●			
	F4	Starting delay after defrost (if F3=0) Will only operate if it is higher than d9	(min.)	0	3	99	●	●			
	F5	Stop fans on opening the door **0**=No, **1**=Yes (Requires a digital input configured as port P10 or P11=1)		0	0	1	●	●			
	EP	Exit to Level 1					●	●			

ALARMS CONTROL

		Description		Values	Min.	Def.	Max.	D1460x	D1461x	D1462x	D1463x	D1464x
AL	A0	Configuration of temperature alarms: **0**=Relative to SP; **1**=Absolute			0	0	1	●	●	●		
	A1	Maximum alarm probe 1 (must be greater than SP)	With NTC	(ºC / ºF)	A2	99.0	99.0	●	●	●		
			With PTC			-	150			●		
	A2	Minimum alarm probe 1 (must be less than SP)		(ºC / ºF)	-50.0	-50.0	A1	●	●	●		
	A3	Temperature alarm delay during start-up		(min.)	0	0	120	●	●	●		
	A4	Temperature alarm delay after completion of a defrost		(min.)	0	0	99	●	●	●		
	A5	Temperature alarm delay after reaching the value of A1 or A2		(min.)	0	30	99	●	●	●		
	A6	External alarm / Severe external alarm delay when receiving digital input signal (P10 or P11=2 or 3)		(min.)	0	0	120	●	●	●		
	A7	Deactivation delay of the external alarm / Severe external alarm when the signal of the digital input disappears (P10 or P11=2 or 3)		(min.)	0	0	120	●	●	●		
	A8	Show warning if defrost is terminated by time-out **0**=No, **1**=Yes			0	0	1	●	●			
	A9	Alarm relay polarity **0**=Relay ON in alarm (OFF no alarm) **1**=Relay OFF on alarm (ON with no alarm)			0	0	1	●		●		
	A10	Temperature Alarm Differential (A1 and A2)		(ºC / ºF)	0.1	1.0	20	●	●	●		
	A12	Door open alarm delay (if P10 or P11=1)		(min.)	0	2	120	●	●	●		
	EP	Exit to Level 1						●	●	●		

GENERAL STATUS

		Description	Values	Min.	Def.	Max.	D1460x	D1461x	D1462x	D1463x	D1464x
CnF	P0	Type of operation **0**=Direct, Cold; **1**=Inverted, Heat		0	*	1			●	●	
	P1	Delay of all functions on receiving electrical power	(min.)	0	0	255	●	●	●	●	
	P2	Access code (password) functions **0**=Inactive; **1**=Block access to parameters; **2**=Keyboard lock		0	0	2	●	●	●	●	●
	P4	Selection of type of inputs **1**=1 Probe (S1+DI1+DI2) **2**=2 Probes (S1+S2+DI1+DI2) **3**=3 Probes (S1+S2+S3+DI1) **4**=2 Probes (S1+S3+DI1)		1	1	4	●	●			
	P5	MODBUS address (Only AKO-D146xx-C)		1	1	255	●	●	●		
	P6	Configuration of AUX relay **1**=2nd Defrost **2**=Alarm **3**=Light **4**=Pump down **5**=Master Defrost		1	1	5	●				
	P7	Temperature display mode **0**=Whole in °C **1**=One decimal in °C **2**=Whole in °F **3**=One decimal in °F		0	1	3	●	●	●	●	●
	P8	Probe to be displayed (as per parameter P4) **0**=visualization of all the probes in sequence; **1**=Probe 1; **2**=Probe 2; **3**=Probe 3		0	1	3	●	●			
	P9	Selection of probe type **0**=NTC; **1**=PTC		0	0	1			●	●	●

GENERAL STATUS

		Description	Values	Min.	Def.	Max.	D1460x	D1461x	D1462x	D1463x	D1464x
CnF	P10	Configuring digital input 1 (DI1) **0**= Off **1**=Door contact **2**=External alarm **3**=Severe external alarm **4**=Slave defrost **5**=Act. ECO mode by pushbutton **6**=Act. Fast Freezing **7**= Low pressure switch * **8**=Remote defrost **9**=Act. ECO mode by switch		0	0	3			●		
				0	0	9	●	●			
	P11	Configuring digital input 2 (DI2) **0**= Off **1**=Door contact **2**=External alarm **3**=Severe external alarm **4**=Slave defrost **5**=Act. ECO mode by pushbutton **6**=Act. Fast Freezing **7**= Low pressure switch * **8**=Remote defrost **9**=Act. ECO mode by switch		0	0	3			●		
				0	0	9	●	●			
	P12	Digital input polarity 1 **0**=Energised on closed contact, **1**=Energised on open contact		0	0	1	●	●	●		
	P13	Digital input polarity 2 **0**=Energised on closed contact, **1**=Energised on open contact		0	0	1	●	●	●		
	P14	Maximum start-up time after pump down (Values between 1 and 9 seconds are not accepted)	(Seg.)	0	0	120	●				
	P15	Maximum pump down time	(min.)	0	0	15	●				
	P22	Cold room light timer	(min.)	0	0	999	●				
	EP	Exit to Level 1					●	●	●	●	●

ACCESS AND INFORMATION CONTROL

		Description	Values	Min.	Def.	Max.	D1460x	D1461x	D1462x	D1463x	D1464x
tid	L5	Access code (Password)		0	-	99	●	●	●	●	●
	PU	Program version (Information)			-		●	●	●	●	●
	Pr	Program revision (Information)			-		●	●	●	●	●
	EP	Exit to Level 1					●	●	●	●	●
EP		Exit programming					●	●	●	●	●

* Only available on AKO-D1464x / D-1464x-C.

P10/P11: Options available depending on the model.

MESSAGES

L5	Access code (Password) request	D	-
dEF	Indicates a defrost is underway. (Only if parameter d2=2)	D	-
E1/E2/E3	Probe 1 / 2 / 3 faulty (open circuit, crossover or temperature outside the probe limits)	D	A
Ini	Setup wizard (See section "Start-up")	D	-
AH	**Flashing:** maximum temperature alarm on probe 1 (A1)	D	A
AL	**Flashing:** minimum temperature alarm on probe 1 (A2)	D	A
AE	External alarm activated (only if parameter P10 or P11=2)	D	A
AES	Severe external alarm activated (only if parameter P10 or P11=3)	D	A
Adt	Defrost time-out alarm (only if parameter A8=1)	D	-
PAb	Door open alarm (Only if P10 or P11=1 and as per time at A12)	D	-
Pd	**Flashing:** Pump down malfunction error (Stop).	D	-
LP	**Flashing:** Pump down malfunction error (Start-up).	D	-

D: Displays the message on the display **A:** Activates the alarm relay (if available).

Technical specifications

Power supply
- **AKO-D14602 / AKO-D14610** . . . 230V~ ±10 % 50/60 Hz 3.5 VA
- **AKO-D14622 / AKO-D14632 / AKO-D14642** . . . 230V~ ±10 % 50/60 Hz 3.75 VA
- **AKO-D14601 / AKO-D14612 / AKO-D14621 / AKO-D14631 / AKO-D14641** . . . 120V~ +8 % - 12 % 50/60 Hz 4 VA
- **AKO-D14622-C / AKO-D14632-C / AKO-D14642-C** . . . 90-240V~ 50/60 Hz 7 VA

Maximum Voltage SELV circuits . . . 20 V

Inputs
- **AKO-D1460x / AKO-D1461x** . . . 1 input NTC/PTC
- **AKO-D1462x** . . . 1 input NTC/PTC + 2 digitised inputs
- **AKO-D1463x / AKO-D1464x** (According to P4) . . . 2 inputs NTC + 2 digitised inputs
- . . . 3 inputs NTC + 1 digitised input

Relay COOL 16 A . . . (EN60730-1: 12(9) A 250V~)
Relay DEF 8 A . . . (EN60730-1: 8(4) A 250V~)
Relay FAN 16 A . . . (EN60730-1: 5(4) A 250V~)
Relay AUX 6 A . . . (EN60730-1: 5(4) A 250V~)
Relay ALARM 6 A (AKO-D1462x). . . . (EN60730-1: 5(4) A 250V~)
Number of relay operations . . . EN60730-1: 100.000 operations
Types of probe. . . . NTC **AKO-149xx** / PTC **AKO-1558xx**
Measurement range NTC. . . . -50,0 °C to +99,9 °C (-58,0 °F to 210 °F)
PTC . . . -50,0 °C to +150 °C (-58,0 °F to 302 °F)
Resolution -50 to 100 °C. . . . 0,1 °C
> 100 °C . . . 1 °C
Working environment. . . . -10 to 50 °C, humidity <90 %
Ambient storage humidity. . . . -30 to 70 °C, humidity <90 %
Class of protection . . . IP40
Fixation . . . Wall assembly, adaptable to built-in housing
Dimensions . . . 171 x 94 x 42 mm
Connections . . . Connections via screw terminals for cables up to 2.5 mm²
Rating of control device: Independent mounting, automatic operation feature Type 1.B, for use in clean environments, Class A software and continuous operation. Pollution classification 2 s / UNE-EN 60730-1.
Double insulation between supply, secondary circuit and relay output.
Rated pulse voltage . . . 2500 V
Temperature during ball-pressure test. . . .
- Accessible parts . . . 75 °C
- Parts which position active elements . . . 125 °C

Voltage and current as per EMC test . . .
- **AKO-D14602 / D14610 / D14622 / D14622-C / D14632 / D14632-C / D14642 / D14642-C** . . . 207 V, 17 mA
- **AKO-D14601 / AKO-D14612 / AKO-D14621 / D14631 / D14641** . . . 105 V, 36 mA

Current of radio jamming supression tests . . . 270 mA

Accesories
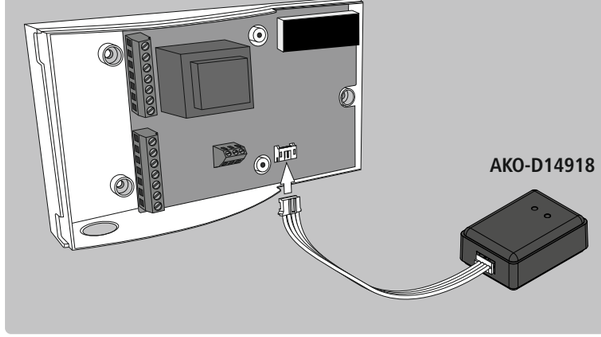
The **AKO-D14918** programming key allows you to quickly and easily copy configured settings from one controller to another with the same functionality.