AKO-D1460x AKO-D1461x AKO-D1462x AKO-D1463x AKO-D1464x AKO-D146xx-C

Wall thermometers, thermostats and controllers

User Manual

AKO

Contents Page

1 Introduction 3
2 Description 4
2.1 Keypad functions 4
2.2 Display messages....5
2.3 Versions and part numbers 6
2.4 Maintenance 6
2.5 Precautions 6
3 Initial Setup 7
3.1 Wizard 7
3.2 Basic settings 8
4 Operation 10
4.1 Compressor control 10
4.2 Defrost control 12
4.3 Fan control 15
4.4 Light control 15
4.5 Pump down function 16
4.6 Alarms 17
5 Wiring 18
5.1 Thermometers 18
5.2 1 relay thermostats 19
5.3 2-relay controller 20
5.4 3-relay controller 21
5.5 4-relay controller 21
6 Connectivity 22
7 Parameter setup 23
7.1 Programming Menu 23
8 Technical specifications 28
8.1 Dimensions 29
8.2 Installation 29
8.3 Accesories 30

AKO Electromecánica thanks and congratulates you for purchasing our product, in whose development and manufacture the most innovative technology has been used, as well as strict production and quality control processes.

Our commitment to satisfy our customers and our continuous efforts to improve every day can be seen in the various quality certifications we have obtained.

This is a high performance, high technology product. The operation and final performance of the equipment depend on proper planning, installation, configuration and commissioning. Read this manual carefully before installation, and always follow its instructions.

Only qualified personnel should install or perform technical assistance on this product.

This product is designed to be used in the applications described in the product manual. AKO Electromecánica gives no guarantee of its operation in any use not foreseen in the manual, and is not responsible for any damage resulting from improper use, configuration, installation or commissioning.

It is the responsibility of the installer and the customer to comply with and ensure others comply with all regulations applicable to installations incorporating our products. AKO Electromecánica is not responsible for any damage caused by non-compliance with regulations. Follow strictly the instructions given in this manual.

To maximise the service life of our equipment, these recommendations should be followed:

Do not expose electronic equipment to dust, dirt, water, rain, humidity, high temperatures, chemicals or corrosive substances of any sort.
Do not submit the equipment to blows or vibrations nor try to manipulate it differently from shown in the manual.
Never exceed the specifications and limitations indicated in the manual.
Always respect the specified ambient working and storage conditions.
During and after installation, avoid leaving loose, broken, unprotected or damaged wiring, since they might constitute a risk for the equipment and its users.

AKO Electromecánica reserves the right to make any non-metrology modification to the documentation or the equipment without previous notice.

1.- Introduction

The Darwin controller range is particularly suitable for controlling refrigerating equipment, wall units, islands, cabinets, electrical panels, etc.

The wide range of models available ensures the best solution for each application.

The MURAL models have been specially designed with a quick, intuitive menu system with which the user will feel more comfortable and their navigation has been designed following mobile phone or remote control trends, thereby allowing quick assimilation of the functions.

Moreover, they have parameter protection using a password to access programming and the HOT KEYS allow quick and easy access to the most frequently used functions.

Temperature displays in cold and hot applications, displayed in °C or °F, selectable by programme, the information shown on the high luminosity screen has been grouped according to functionality. A first display, larger in size, shows the temperature and the operating messages. The second display shows the signalling icons for the different outputs.

The parameters have been categorised by names and grouped by functions, have various stored pre-programmes, depending on the application, for a quicker start-up.

Available Models

Thermometers: Ideal for applications where only the temperature needs to be shown.

- **AKO-D14601, AKO-D14602.**

Thermostats: They include a relay which is mainly to control positive services (temperature above 3 °C). They have defrost by compressor stop but can operate in Cooling or Heating mode.

- **AKO-D14610, AKO-D14612**

Thermostats with alarm relay: In addition to the control relay, they have an alarm relay.

- **AKO-D14621, AKO-D14622, AKO-D14622-C**

Controllers: They can have 2 to 4 relays, have communications, clock in real time and advanced control functions. Their application depends on the no. of relays.

- 3 relays: Designed to control positive services (above 3 °C). Defrost by resistors or cycle reversal.
  - **AKO-D14631, AKO-D14632, AKO-D14632-C**
- 4 relays: Designed to control positive or negative services. Defrost by resistors or cycle reversal. Configurable auxiliary relay.
  - **AKO-D14641, AKO-D14642, AKO-D14642-C**

2.- Description

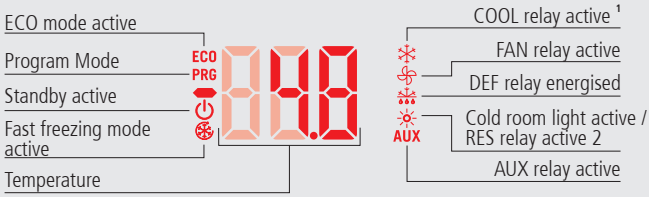

[1]:In **AKO-D1461x / D1462x**, if P0=0
[2]:In **AKO-D1461x / D1462x,** if P0=1

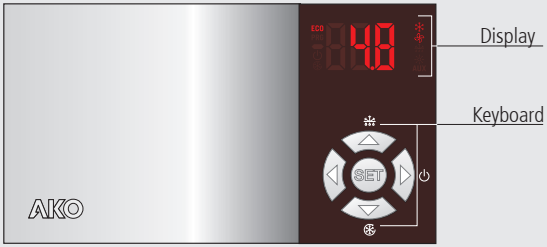

Flashing lights indicate that the function in question should be activated by temperature, but is not due to a conflicting timing or protection parameter.

2.1.- Keypad functions

Press for 5 seconds, allows changing the set point (SP).
Pressing for 10 seconds goes to the programming menu.
In the programming menu, go to the level displayed or accept the new value while setting a parameter.

Press for 5 seconds to start/stop Defrost mode.
In the programming menu, allows you to scroll through the various levels or, during the setting of a parameter, to change the value.

Press for 5 seconds to start/stop Fast Freezing mode (rapid cooling). (Function available depending on the model)
In the programming menu, allows you to scroll through the various levels or, during the setting of a parameter, to change the value.

Press for 5 seconds, activates standby mode.
Pressing for two seconds, the device returns to normal. In Standby mode, the equipment performs no actions and only the m indicator is displayed on the screen.
In the programming menu, go to the level displayed.

Pressing it for 2 seconds, activates or deactivates the cold room light (if P6=3). This function stays active although the unit is in the m mode. (Only controllers with 4 relays).
In the programming menu, exit without saving parameter, return to previous level or exit programming.

2.2.- Display messages

L5 / 0	Flashing 0: Access code (Password) request You must enter the access code configured on L5 to execute the requested function (p. 9 and 23). See also parameter P2 (p. 27)
E1 / E2 / E3	Probe 1, 2 or 3 faulty (open circuit, crossover or temperature outside the probe limits; **NTC**: -50 To 99 °C; **PTC**: -50 To 150 °C).
dEF	Indicates a defrost is underway. After defrosting, the message will continue to be displayed during the time specified in parameter d3 (see Chapte 4.2).
AH / 16	ting with temperature: Maximum temperature in control probe alarm. Temperature set in A1 has been reached (p. 17) . (Activates alarm relay)
AL / 16	Alternating with temperature: Minimum temperature in control probe alarm. Temperature set in A2 has been reached (p. 17) (Activates alarm relay)
AE / 16	Alternating with temperature: External alarm activated (by digital input) (p. 17) (Activates alarm relay)
AES / 16	Alternating with temperature: Severe external alarm activated (by digital input) (p. 17) (Activates alarm relay)
Adt / 16	Alternating with temperature: Defrost alarm time-out. Displayed when a defrost ends after the maximum time elapsed as defined in parameter d1. (p. 17) (Does not activate alarm relay)
PAb / 16	Alternating with temperature: Door open alarm. Shown if the door remains open longer than specified in parameter A12 (p. 17) (Does not activate alarm relay)
Pd / 16	Alternating with temperature: Pump down malfunction error (Stop) (p. 17). (Does not activate alarm relay)
LPA / 16	Alternating with temperature: Pump down malfunction error (Start up) (p. 17). (Does not activate alarm relay)

2.3.- Versions and part numbers

MODELS	POWER SUPPLY	PROBES	DIGITAL INPUTS	TYPE	ALARM RELAY	RELAYS	COMMUNICATION	ECO MODE
AKO-D14601	120 V	1 (NTC/PTC)	-	Thermometers	NO	0	NO	NO
AKO-D14602	230 V	1 (NTC/PTC)	-	Thermometers	NO	0	NO	NO
AKO-D14610	230 V	1 (NTC/PTC)	-	Thermostats	NO	1	NO	NO
AKO-D14612	120 V	1 (NTC/PTC)	-	Thermostats	NO	1	NO	NO
AKO-D14621	120 V	1 (NTC/PTC)	2	Thermostats	YES	2	NO	NO
AKO-D14622	230 V	1 (NTC/PTC)	2	Thermostats	YES	2	NO	NO
AKO-D14622-C	90 - 240 V	1 (NTC/PTC)	2	Thermostats	YES	2	YES	NO
AKO-D14631	120 V	Up to 3 (NTC)	Up to 2	Controllers	NO	3	NO	YES
AKO-D14632	230 V	Up to 3 (NTC)	Up to 2	Controllers	NO	3	NO	YES
AKO-D14632-C	90 - 240 V	Up to 3 (NTC)	Up to 2	Controllers	NO	3	YES	YES
AKO-D14641	120 V	Up to 3 (NTC)	Up to 2	Controllers	According to P6	4	NO	YES
AKO-D14642	230 V	Up to 3 (NTC)	Up to 2	Controllers	According to P6	4	NO	YES
AKO-D14642-C	90 - 240 V	Up to 3 (NTC)	Up to 2	Controllers	According to P6	4	YES	YES

2.4.- Maintenance

Clean the surface of the alarm using a soft cloth, soap and water. Do not use abrasive detergents, petrol, alcohol or solvents.

2.5.- Precautions

Using the equipment without following the manufacturer's instructions may affect the device's safety requirements. To ensure that the device operates correctly, only probes supplied by AKO should be used.

The unit must be installed in a location protected from vibrations, water and corrosive gases, where the ambient temperature does not exceed that shown in the technical data.

To get a correct reading, the probe must be situated in a location without any external heat influences except for the temperature which is being measured or controlled.

The probe and its cable should **NEVER** be installed in the same conduit as power, control or supply cables.

The power supply circuit must be provided with a main switch rated at least 2 A, 230 V, located close to the equipment. The cables will enter through the back and should be type H05VV-F or H05V-K. The gauge will depend on local regulations, but should in no case be less than 1 mm².

The relay contact connecting cables should be 1 to 2.5 mm² and the common cable should always be 2.5 mm². Halogen-free cables are recommended.

Between -40 °C and +20 °C, if the NTC probe is extended up to 1,000 m with minimum 0.5 mm² wire, the maximum deviation will be 0.25 °C (Wire for probe extension ref. **AKO-15586**).

3.- Initial Setup

3.1.- Wizard (not available in thermometers)

The Darwin range controllers have a setup wizard to configure the main parameters for the type of application chosen (see table). The other parameters will be configured according to the "Def" column in the parameter table (see section 7.1.3).

For the meaning of each parameter, see section 7.1.3.

This wizard only starts the first time the device is powered.
To restart the wizard after the initial configuration, restart the controller (turning the power supply on and off) and before 8 seconds have passed, press the following sequence of keys in the indicated order: ▲ , ▼ y **SET.**

When the device is turned on for the first time, the screen displays the "**Inl**" / "1" alternatively, choose the option best suited to your facility using the ▲ and ▼ keys according to the table below:

Thermostats

	VARIABLE PARAMETERS			
Inl options	**SP**	**d0**	**d1**	**P0**
1: Chilling	0 °C (32 °F)	6	20	0
2: AC	21 °C (69.8 °F)	0	0	0
3: Heat / Incubators	37 °C (98.6 °F)	-	-	1

Controllers

	VARIABLE PARAMETERS				
Inl options	**SP**	**d0**	**d1**	**F0**	**F3**
1: Multi-purpose	2°C (36°F)	4	20	8°C (46°F)	1
2: Frozen	-18°C (-0.4°F)	4	20	0°C (32°F)	0
3: Fruits and vegetables	10°C (50°F)	4	20	30°C (86°F)	1
4: Fresh fish	0°C (32°F)	4	20	8°C (46°F)	1
5: Soft Drinks	3°C (37.4°F)	24	20	8°C (46°F)	1
6: Bottle Racks	12°C (53.6°F)	24	20	30°C (86°F)	1
7: AC	21°C (69.8°F)	96	0	99°C (210°F)	1

⚠ **WARNING:** The default parameters by type of application have been defined for the most common applications. Check that these parameters are suitable for your installation.

3.2.- Basic settings

Type of operation (Only thermostats)

Specifies how the controller will control temperature (see page 10)
P0=0 Direct mode, refrigeration applications
P0=1 Reverse mode, heating applications

Type of inputs (Only STANDARD controllers)

Some units have 3 programmable inputs to function as probes or as digital inputs as needed. This configuration parameter is defined by P4, with the following options:

P4=1: 1 probe input + 2 digital inputs (S1 + D1 + D2).
P4=2: 2 probe inputs + 2 digital inputs (S1 + S2 + D1 + D2).
P4=3: 3 probe inputs + 1 digital input (S1 + S2 + S3 + D1)
P4=4: 2 probe inputs + 1 digital input (S1 + S3 + D1)

Probe types (only available in thermometers and 1-relay controllers)

Parameter P9 permits selecting the type of probes to be connected between NTC (P9=0) and PTC (P9=1).

Probe function

S1: Temperature control probe, controls temperature of the chamber or cabinet (SP) acting on the COOL/RES relay.
S2*: Evaporator probe, controls the defrost end temperature (d4) and shuts down the fans (F0).
S3:** Second evaporator or product temperature probe, controls defrost end temperature (d4) of a second evaporator. If second defrosting is not configured (P6≠1), it will function as product temperature probe.

* (Only available in controllers, if P4= 2 or 3)

** (Only available in controllers, if P4= 3 or 4)

Probe to display:

Parameter P8 defines which probe is displayed on the controller screen (**P8=0** All probes sequentially, **P8=1** Probe 1, **P8=2** Probe 2 and **P8=3** Probe 3).

In the sequential mode the screen will display the name of each probe followed by the temperature of each.
(S1 - 8,3ºC - S2 - 6,2ºC - S3 - 9,4ºC)

Calibrating probe 1 (C0)

Allows correcting a possible error in probe reading. This can be very useful when you cannot place it in the ideal place.

Display mode

Parameter P7 sets the display mode for the temperature displayed on the screen (**P7=0** No decimals in ºC, **P7=1** With a decimal in ºC, **P7=2** No decimal degrees in ºF, **P7=3,** with a decimal in ºF).

The changes in this parameter do not affect the operation of the system because the controller automatically calculates equivalent values for the set point, locks, alarms, calibration, etc.

Upper/lower blocking of the set point

Sets the upper (C2) and lower (C3) thresholds for the set point value (SP). These limits are also valid for automatic variations of the set point (C10 and C12).

Digital input function (Options available depending on the model)

The digital input function is defined by parameters P10 (D1) and P11 (D2), with the following options:

P10/P11=0: Off (no function)

P10/P11=1: Door contact, controls the activation/deactivation of ECO mode. (p. 11)

P10/P11=2: External alarm, controls activation/deactivation of the external alarm (p. 17).

P10/P11=3: Severe external alarm, controls activation/deactivation of the severe external alarm (p. 17).

P10/P11=4: Slave defrost, activates defrost synchronisation with master unit (p.13).

P10/P11=5: Activation of the ECO mode by pushbutton, controls activation/deactivation of the ECO mode using an external pushbutton (p. 11).

P10/P11=6: Activation of the fast freezing mode, controls the activation/deactivation of this mode with an external button (p. 10).

P10/P11=7: Low pressure switch controls the activation/deactivation of the compressor depending on the state of the low pressure switch when the pump-down function is on (p. 16) (only available in P10 and 4-relay units)

P10/P11=8: Defrost activation. You can control the activation/deactivation of the defrost using an external pushbutton connected to the digital input (p. 13).

P10/P11=9: Activation of the ECO mode by switch, controls activation/deactivation of the ECO mode using an external switch (p. 11).

Digital input polarity (According to model)

Parameters P12 (D1) and P13 (D2) define the polarity of the digital inputs, with the following options:

P12/P13=0: The digital input is energised on **closed** contact.

P12/P13=1: The digital input is energised on **open** contact.

Password

Parameter L5 sets a 2-digit access code for accessing certain controller functions. Its functionality is set using the P2 parameter and a choice of several possibilities:

P2=0: Inactive access code; password will never by requested.

P2=1: Blocks access to parameters; will request access code (L5) when trying to access the program menu.

P2=2: Blocks keypad functions; will request the access code (L5) when trying to activate any of the keypad functions (standby, defrost, fast freezing, program menu, set point change menu, etc.)

Power supply delays

Parameter P1 delays all controller functions when energised, and displays a minute count. It is normally used to stagger the start-up of various refrigeration services in a single system during the process of start-up or reset after a period without power. It can also help to avoid repeated system start-ups when tests are carried out on the facility's electrical system.

IMPORTANT: During the time set in P1, the controller will only show the temperature. It will not control the system in any way. If additional delays (alarm, protection of the compressor, etc.) have been programmed, they start to run after the period set by P1.

4.- Operation

4.1.- Compressor control (not available in thermometers)

NORMAL OPERATION (COOL)

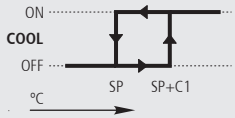

When the temperature in probe 1 reaches the set point value (SP) plus the probe differential (C1), the COOL relay is activated, starting the compressor and leading to a drop in temperature. Once you the set point value (SP) is reached, the COOL relay is turned off, stopping the compressor.

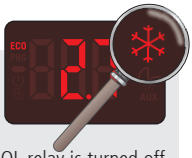

REVERSE OPERATION (HEAT) (Only thermostats)

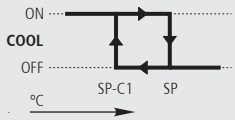

When the temperature in probe 1 reaches the set point value (SP) minus the probe differential (C1), the COOL relay is activated, starting the heating resistors and leading to a rise in temperature. Once the set point value (SP) is reached, the COOL relay is turned off, cutting power to the resistors.

FAST FREEZING MODE (Only controllers)

Commonly used for fast freezing newly stored product.

Activated by pressing the ▼ key for 5 seconds. The display shows the ❄ icon while this mode is active.

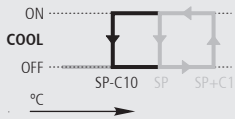

Upon enabling this mode, the compressor starts up until the temperature of probe 1 reaches the set point value, minus the change indicated in parameter C10.

The unit will then return to normal operation.

If this point is not reached, the unit returns to normal operation after the time set in C9, or by pressing the ▼ key again for 5 seconds.

Otherwise, users may turn this function on and off at will by pressing an external button (1-touch on/off), for which one of the digital inputs must be set as "fast freezing activation" (P10 or P11=6). (According to model)

ECO MODE (Only controllers)

This mode saves energy during periods in which the refrigeration cabinet is not used much. While this mode is active, the screen will display the **ECO** icon.
It is activated after a certain period (set in parameter C11) of cabinet door inactivity, for which one of the digital inputs must be set as "door contact" (P10 or P11=1).

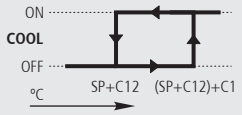

The operation is the same as normal (cool), but increasing the set point by the number of degrees set in parameter C12.

Optionally, you can activate and deactivate this way whenever you want, using an external pushbutton (1 press to activate/deactivate), or using a switch. To do so, one of the digital inputs such as "activation of the ECO mode by pushbutton" (P10 or P11 = 5) or "activation of the ECO mode by switch" (P10 or P11 = 9) should be configured.
If parameter C11 is set to 0, the ECO mode will only activate via switch (P10 or P11=9).

COMPRESSOR PROTECTION DELAY

There are different types of delay, selectable using parameter C4, to protect the compressor (COOL relay). These delays prevent continuous compressor starts and stops due to sudden changes in temperature.

OFF-ON : Minimum compressor OFF time before each start-up.
OFF-ON / ON-OFF : Minimum time during which the compressor will remain ON and OFF in every cycle. (C4=1).

The delay time is defined by parameter C5.

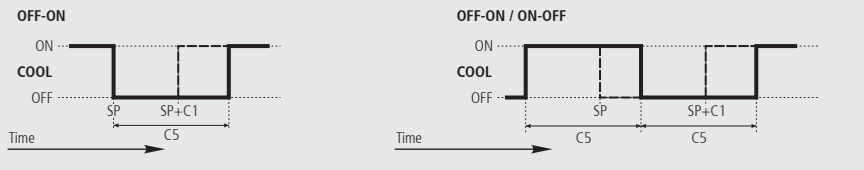

OPERATION IN CASE OF PROBE 1 FAILURE

If probe 1 fails (breakdown, disconnection, etc.), the compressor behaviour will depend on parameter C6, with one of the following options being available:

C6=0: The compressor will be stopped until probe 1 is working again.
C6=1: The compressor will be operational until probe 1 is working again.
C6=2: The compressor will operate according to the average performance of the last 24 hours, taking into account the number of starts and stops and the average time in each state (stop-start).
C6=3: The compressor will run as scheduled in C7 (ON) and C8 (OFF). (Available depending on model).

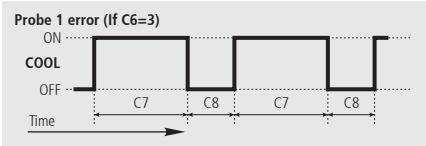

4.2.- Defrost control (not available in thermometers)

On units with 1 relay, defrost can only be set by compressor shutdown.

On units with 2 or 3 relays, the auxiliary relay must be set as "defrost" (P6=1), except for defrost by compressor shutdown.

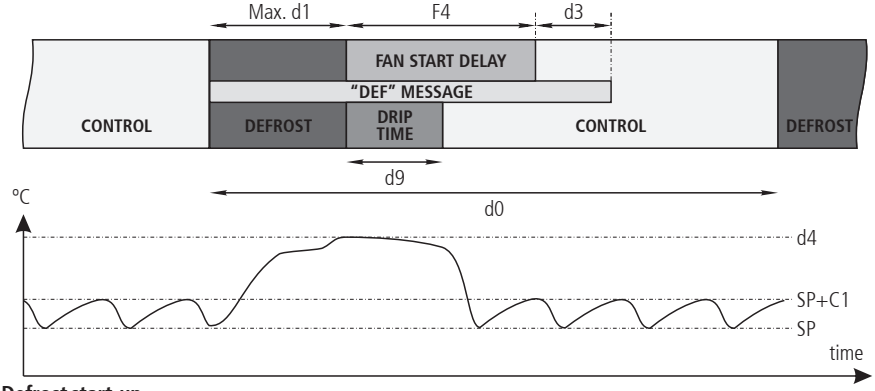

Defrost start-up

Defrost is initiated if:

- Time scheduled in parameter d0 has passed since the beginning of last defrost.
- It is time for one of its scheduled start-ups (parameters d10 to d15). <u>This feature requires that d0 is set to 0</u> (only units with RTC).
- The ❄ key is pressed for 5 seconds

Defrost type

Selected by parameter d7 to define the controller performance during the defrost process.

By resistors **(d7=0)**	The defrost resistors start up and the compressor stops; defrost is the result of heat from the resistors. Fans will be running or not depending on parameter F3.
Reverse cycle (Heatpump) **(d7=1)**	A 4-way valve is activated which reverses the cold-generating circuit and the compressor starts up, forcing the defrost. Fans will be running or not depending on parameter F3.

Drip time*

Parameter d9 sets drip time and the time added at the end of defrost cycle to allow for drainage of the remaining water in the evaporator. During this time the compressor and fans will not be running (unless defrost is by air).

Defrost termination

The defrost will terminate if:

- The temperature programmed in parameter 24 has been reached in probe 2 (requires an additional input for the second probe and activating it via parameter P4).
- Time set in parameter d1 has passed (maximum duration of defrost).
- The ❄ key is pressed for 5 seconds.

Message displayed during defrost

Set by parameter d2, with the choice of showing the actual temperature detected by probe 1 (d2=0), displaying the temperature detected by probe 1 at the start of defrost (d2=1) or displaying the DEF message (d2=2). The d3 parameter defines the time during which the message is displayed, once the drip time (D9) and the fan stop time (F4) is over.

Other parameters

Parameter d5 allows users to specify if the unit will (d5=1) or will not (d5=0) defrost when powered up (initial start-up or after a power failure). In case of choosing option YES (d5=1), the defrost will start after the delay time specified in d6.

Using parameter d8, users define the computation of time in d0, choosing between total time elapsed (d8=0) or the total compressor running time (d8=1).

NOTE: If parameter d1 is set to 0, no defrost will be performed.
Defrosting is not performed if the controller is set to heat mode (P0=1)

Second defrost (only 4-relay controllers)

It works the same way as defrost, but acts on the auxiliary relay (only if P6=1), controlled by probe 3 and serves to control defrost of a second evaporator.

Remote defrost* (only controllers)

Starts or stops the defrost using a pushbutton connected to one of the digital inputs. This input should be configured for this function (P10 or P11=8).

Defrost Master - Slave (only controllers)

This feature allows users to synchronize defrost of several units. This is especially suitable for cabinets with multiple independently controlled evaporators, thus avoiding having an evaporator defrosting (generating heat) while the next is generating cold.

When the main controller designated as Master (P6=5) initiates a defrost, it forces the rest, which must be configured as slaves (P10 or P11=4), to initiate their defrost cycles.

When the main controller ends the defrost according to the time set by d1 (the temperature in probe 2 is not taken into account) it will force slaves to end defrosting and start synchronised drip time.

The master defrost function can only be set on 4-relay units and requires the use of an external relay (see diagram on next page).

Up to 15 units may be connected to a Master Controller and the maximum distance should not exceed 15 metres.

Example of Master - Slave defrost function

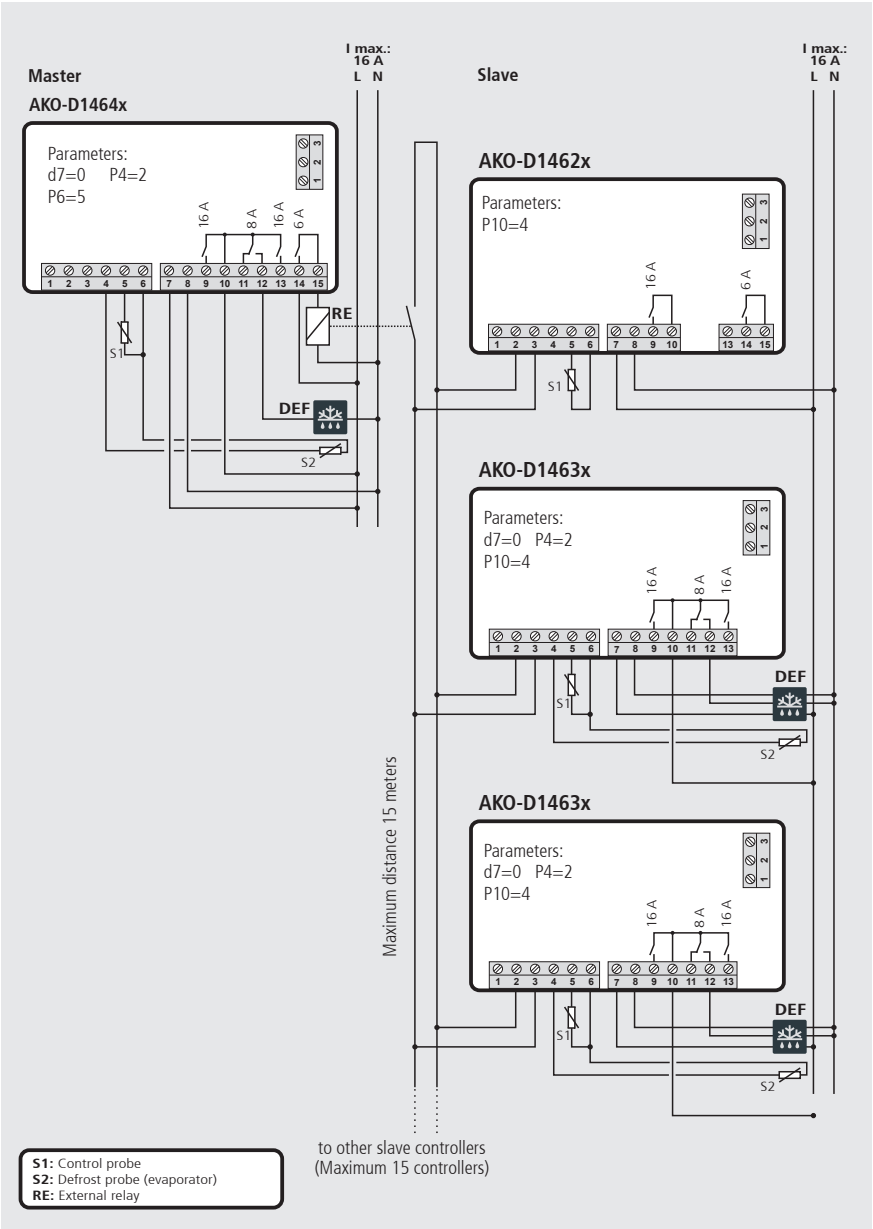

4.3.- Fan control (Only controllers)

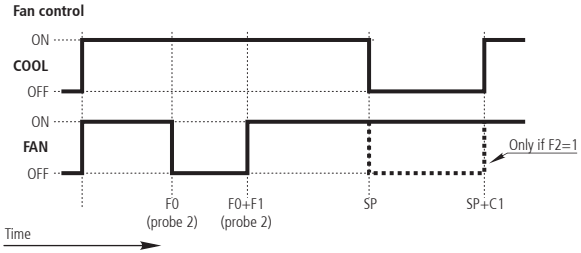

Fans are controlled with probe 2 (evaporator) and parameters F0 (shutdown temperature) and F1 (Probe differential).

Even if probe 2 is not connected (P4=1) or an error is detected in the probe (E2), the fans will always run regardless of parameters F0 and F1, but taking into account parameters F2 to F5.

Parameter F2 defines the status of the fans during compressor stops and parameter F5 defines the status of the fans when the door is opened, which requires setting up one of the digital inputs as door contact (P10 or P11=1).

If F5 = Yes, and the door remains opened more than 15 seconds, the compresor also stops.

Parameter F3 defines the status of fans during defrost.

Parameter F4 defines the fan start-up delay after defrost (see section 4.2)

4.4.- Light control (Only 4 relays controllers)

In equipment with 4 relays, it is possible to configure the auxiliary relay as "Light" (P6=3), which allows controlling the cold room light using the controller.

To switch the cold room light on or off, press key ◀ for 2 seconds.

To ensure that the light switches on when opening the door, one of the digital inputs should be configured as "Door contact" (P10 or P11=1).

Using parameter P22, a timer can be programmed which keeps the lights switched on after closing the door, the time is specified in minutes.

4.5.- Pump down function (only four-relay controllers)

This function prevents compressor problems caused by movement of the refrigerant, using a stop/start technique of the unit controlled by liquid solenoid, the low pressure switch and the compressor.

For this feature to be active, the auxiliary relay must be set as "Pump down" (P6=4), which automatically configures digital input 1 as "low pressure switch" (P10=7)

SHUTOFF

When temperature probe 1 reaches the set point value (SP), the AUX relay is deactivated (OFF) by closing the liquid solenoid.

Since the compressor is still running (COOL relay ON) the evaporator pressure drops suddenly. When it reaches a specific point, the low pressure switch is activated, changing the state of digital input 1, and the controller stops the compressor (COOL Relay OFF).

This manoeuvre isolates the refrigerant from the compressor crankcase, preventing serious damage on start-up.

In case of low pressure switch failure, the controller stops the compressor after the safety time set at P15, showing the message "Pd", but it will continue to function normally.

STARTUP

When temperature probe 1 reaches the set point value plus the differential (SP+C1), the AUX relay is activated (ON), opening the liquid solenoid. This causes the pressure in the evaporator to increase, disabling the low pressure switch. The controller detects this change and starts the compressor (COOL relay ON).

Balancing the high and low pressure settings before start-up makes it much smoother and extends compressor life.

If after a time (as determined by P14) after opening the liquid solenoid (AUX relay ON), the low pressure switch is not turned off, the controller will again close the solenoid (AUX relay OFF) and will repeat the manoeuvre after 2 minutes. The controller will display "LP".

STAND-BY

If the pump-down function is active, some time may elapse from the time the stand-by function starts until the controller stops. This is because certain control phases of the system cannot be stopped.

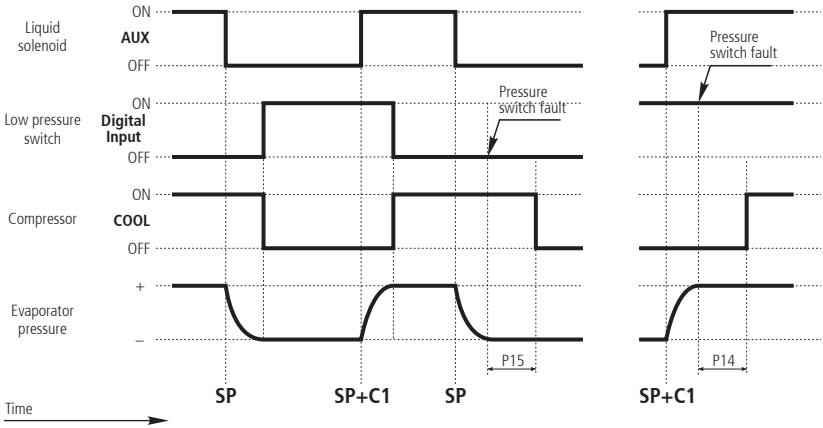

4.6.- Alarms (Only controllers and thermostats) (Depending on model)

The unit alerts users via a message on the screen, by activating a relay* or both, when the programmed parameter criteria are met.

Max/Min Temperature Alarm

Shows the **AH** or **AL** message when the temperature in probe 1 reaches the value set in the A1 (maximum temperature) and A2 (low temperature) parameters.

This value can be:

Absolute (A0=1): A1/A2 should indicate the temperature at which the alarm should be activated.

Relative to SP (A0=0): A1/A2 should indicate the number of degrees above or below the set point at which the alarm is activated. This option allows users to adjust the set point without having to modify the high and low alarm settings.

Parameter A10 sets the differentials for both parameters (hysteresis).

Activates the alarm relay (Depending on model).

Example

In a controller we configure the following parameters: **SP**=2, **A1**=10, **A10**=2

- If A0=0 (relative to SP), the maximum temperature alarm goes off when probe 1 reaches 12 degrees and is disabled when it reaches 10 degrees.
- If A0=1 (absolute), the maximum temperature alarm goes off when probe 1 reaches 10 degrees and is disabled when it reaches 8 degrees.

External alarm/severe external alarm (Depending on model)

Displays the message **AE** (external alarm) or **AES** (severe external alarm), when the digital input configured as external alarm or severe external alarm is activated.

The severe external alarm also deactivates all the charges, therefore, the temperature regulation is stopped. When this alarm disappears the device returns to its normal operation.

At least one of the digital inputs must be configured as external alarm (P10 or P11=2) or severe external alarm (P10 or P11=3).

Activates the alarm relay (Depending on model).

Defrost alarm completed by time. (Only controllers)

Shows the **Adt** alarm message when a defrost terminates by time-out, if parameter **A8**=1.

This alarm is only displayed on the screen, does not activate the alarm relay

Open door alarm (Depending on model)

Displays **PAb** message when the digital input configured as door contact (P10 or P11=1), is active longer than the time set by parameter A12.

This alarm is only displayed on the screen, does not activate the alarm relay

Pump down alarm timed-out (only 4-relay controllers)

The **LP** or **Pd** message is displayed when the pump down function times out, either in the start-up or the shutoff phase (see section 4.5).

This alarm is only displayed on the screen, does not activate the alarm relay

*Only available in thermostats with 2 relays or in controllers with 4 relays. In controllers with 4 relays the relay AUX must be configured as alarm (P6 =2).

Alarm delay

These delays prevent the display of specific alarms while allowing the unit to recover normal operation after certain events.

- Start-up delays (A3): Delays activation of temperature alarms on power-up (start-up or after a power failure). This allows avoiding continuous alarms upon start-up
- Delay after defrost (A4): Delays activation of temperature alarms post-defrost.
- Delay of max/min temperature alarm (A5): Delays activation of maximum (A1) and minimum (A2) temperature alarms from the moment temperature probe 1 reaches the set value.
- Delay of external alarm / severe external alarm activation (A6): Delays the activation of the external alarm from the moment the digital input becomes active.
- Delay of external alarm / severe external alarm deactivation (A7): Delays the deactivation of the external alarm from the moment the digital input becomes inactive.
- Door opening alarm relay (A12): Delays activation of the open door opening detection alarm.

Alarm relay configuration (Depending on model)

If your equipment has an alarm relay (see page 6) or auxiliary relay configured as an alarm (P6=2), the parameter A9 allows specifying the relay status when an alarm is triggered:

A9=0 relay active (ON) in case of alarm (no alarm OFF); A9=1 Inactive relay (OFF) in case of alarm (no alarm ON)

5.- Wiring

The probe and its cable should **NEVER** be installed in the same conduit as power, control or supply cables.

Legend:

- S1: Probe 1, temperature in the chamber or cabinet
- S2: Probe 2, defrost.
- S3: Probe 3, temperature of product / 2nd defrost.
- DI1/DI2: Digital Input 1 / Digital Input 2.

5.1.- Thermometers

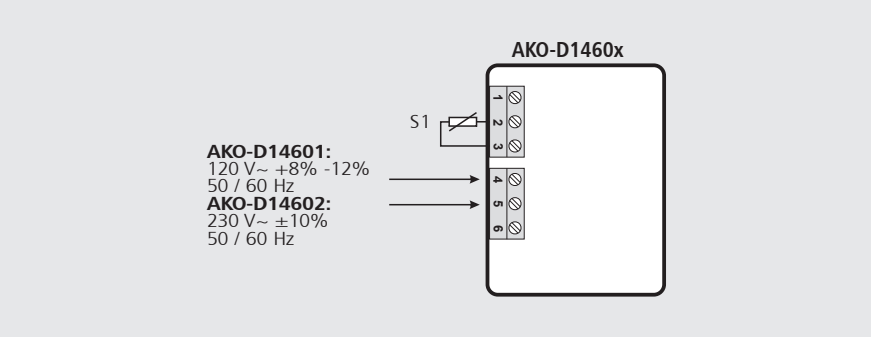

5.2.- 1 relay thermostats (Control)

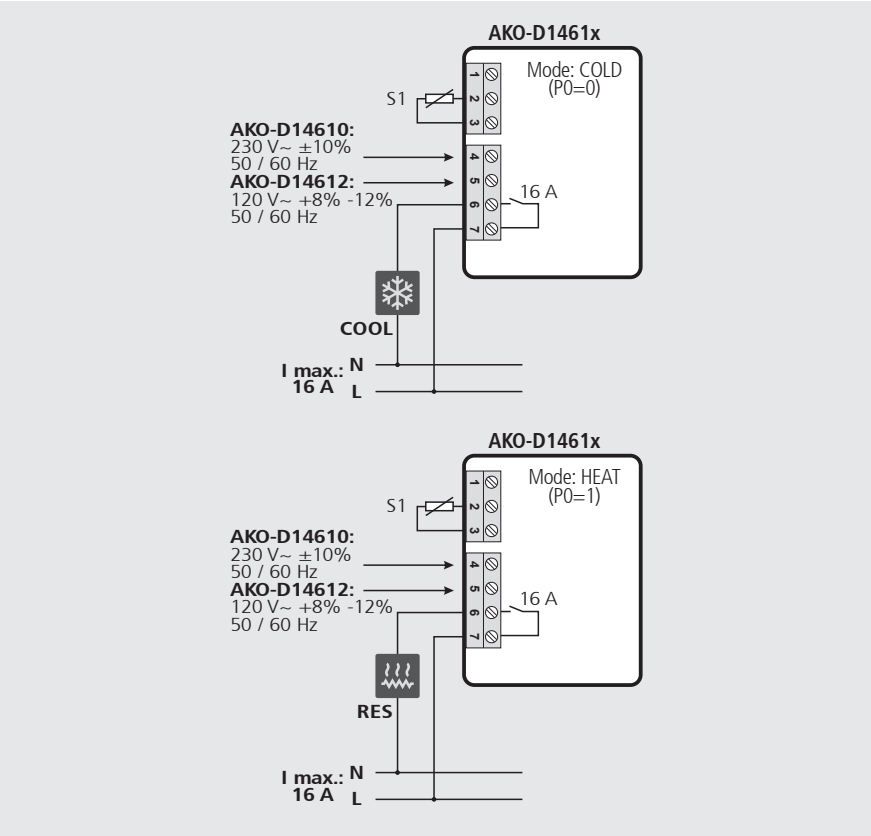

5.3.- 2-relay controller (Control + Alarm)

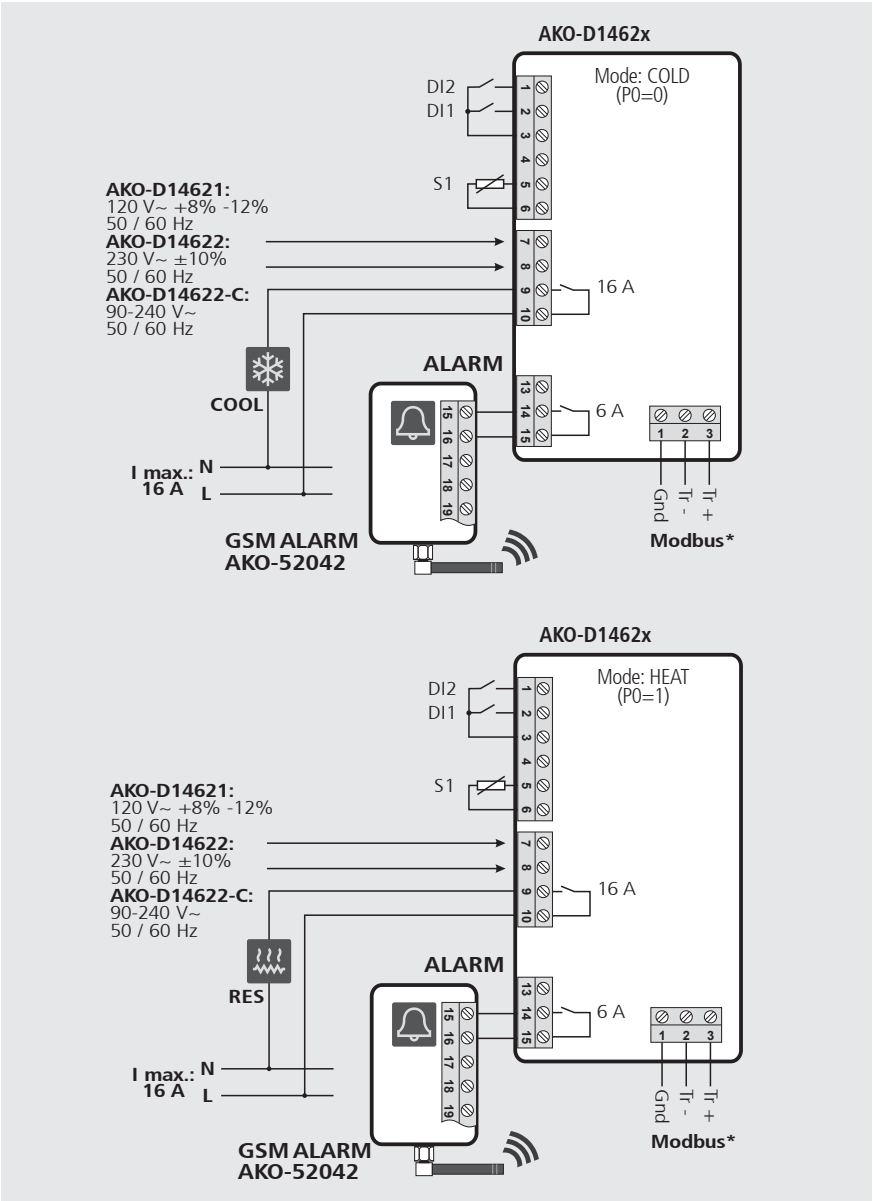

*** According to model**

5.4.- 3-relay controller

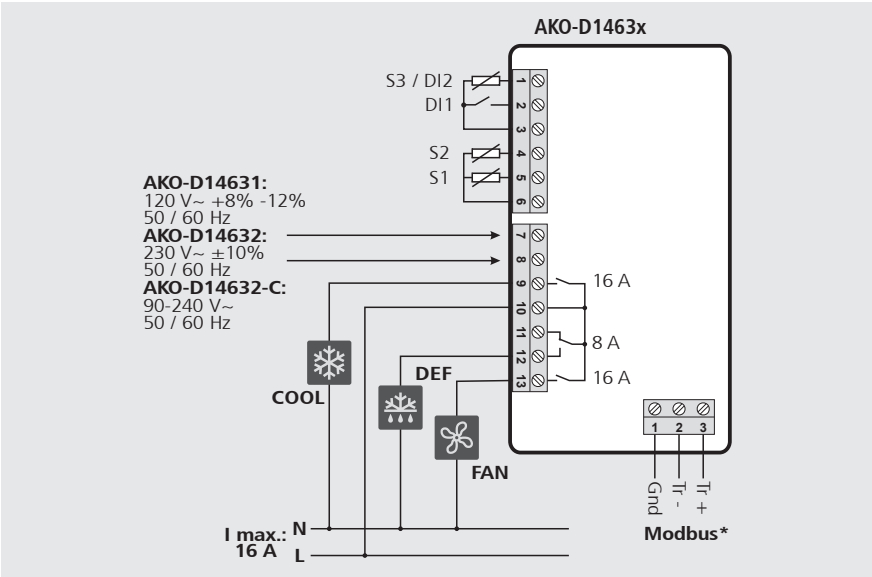

5.5.- 4-relay controller

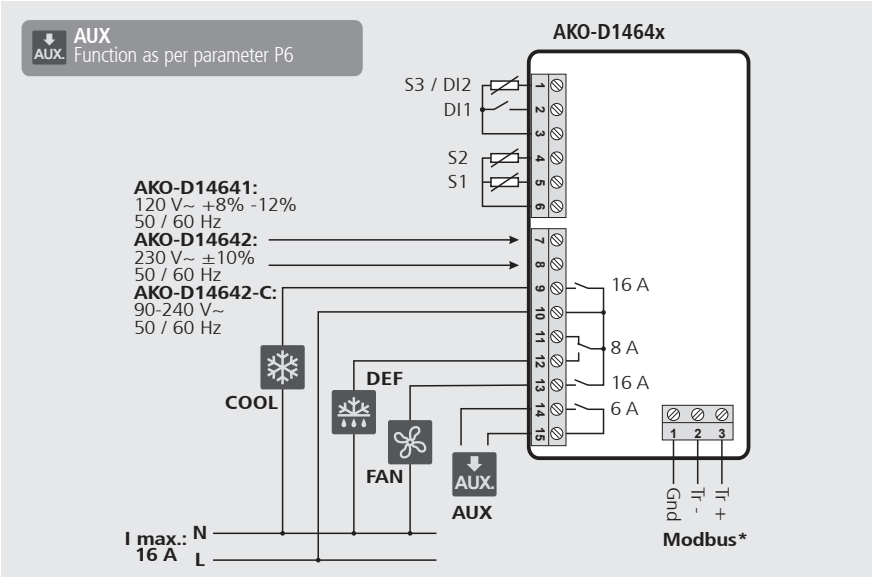

* According to model

6.- Connectivity

Models with communication capabilities (see table on page 6) have an RS485 (MODBUS) data connection port, which allows users to manage them remotely via a PC with the **AKONet** programme or an **AKO-5011** server.

A different address must be assigned to each unit on the same network. This address is defined by parameter P5.

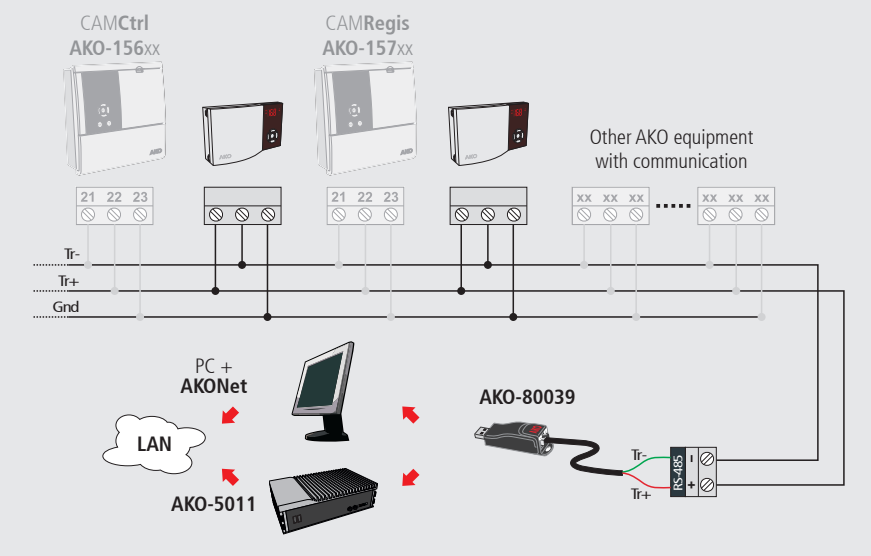

7.- Parameter setup

Through the programming menu users can set different parameters to adjust the operation of the controller to the needs of their installation.

7.1.- Programming Menu

To change the set point, press the **SET** button for 5 seconds, or until the "SP" is displayed on the screen (not available in thermometers).

To access the programming menu, press the **SET** button for 10 seconds, or until the "PrG" appears on the screen.

IMPORTANT: If the access code function has been set as keypad lock (P2=2) or as parameter access block (P2=1), when trying to access either of the two functions, users will be prompted to enter the access code programmed in L5. If the code entered is not correct, the unit will revert to displaying the temperature.

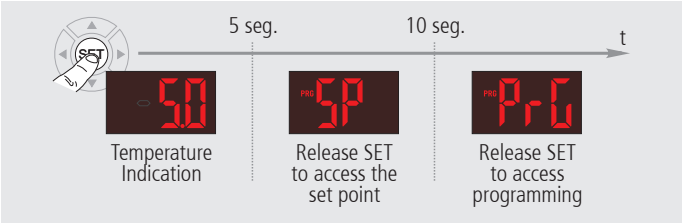

7.1.1.- Changing the set point (not available in thermometers)

Press the **SET** button for 5 seconds or until "SP" appears on the screen.

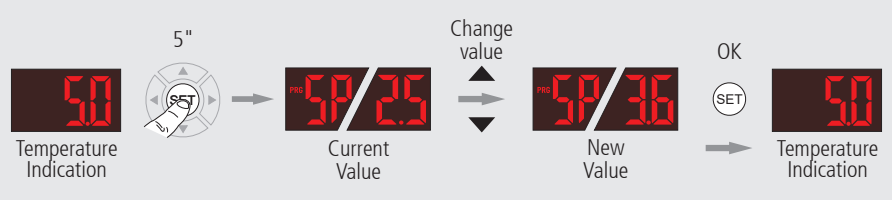

7.1.2.- Changing the operating parameters

Press the **SET** button for 10 seconds or until "PrG" appears on the screen.

After 20 seconds with no key being pressed, the equipment will return to the previous level. If you are on level 3, the changes will not be saved.

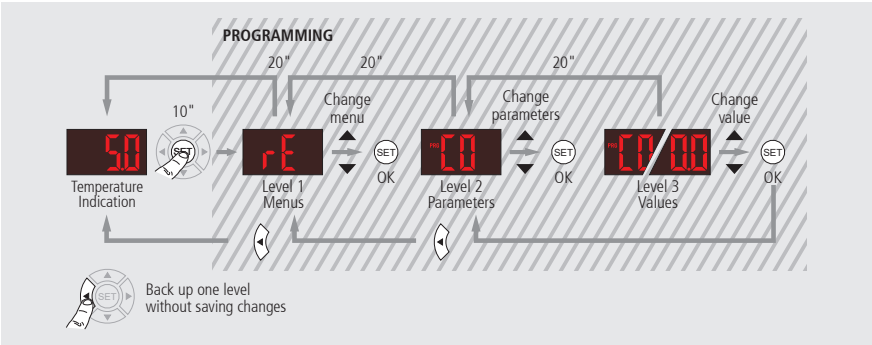

7.1.3.- Parameters

The unit's operation parameters are organized into groups or families according to their function.

The **def.** column shows factory-set default parameters. Those marked with an * are variable depending on the application chosen in the wizard (see section 3.1). Temperature values are expressed in °C. (Equivalent temperature in °F)

IMPORTANT: The available parameters in each piece of equipment depend on the functionalities it includes, as such, it is possible that some parameters do not appear in your equipment.

Level 1.- Regulation and Control

Level 2	Description	Values		Min	Def	Max.
SP	Temperature Adjustment (Set Point) (limits depending on probe type) (Page 10)	(°C/°F)	NTC	-50	*	99
			PTC		-	150
C0	Calibrating probe 1 (Offset) (Page 8)	(°C/°F)		-20.0	0.0	20.0
C1	Probe 1 differential (Histeresis) (Page 10)	(°C/°F)		0.1	2.0	20.0
C2	Upper blocking of the set point (Page 8) (cannot be set above this value)	(°C/°F)	NTC	C3	99	99
			PTC		-	150
C3	Lower blocking of the set point (Page 8) (cannot be set below this value)	(°C/°F)		-50	-50	C2
C4	Type of delay for protection of the compressor (Page 11): **0**=OFF/ON (since the last disconnection); **1**=OFF-ON/ON-OFF (since the last shut-down /start-up)			0	0	2

Level 2	Description	Values	Min	Def	Max.
C5	Protection delay time (value of the option selected in parameter C4) (Page11)	(min.)	0	0	120
C6	Status of COOL relay with probe fault (Page 11): **0**=OFF; **1**=ON; **2**=Average based on last 24 hours prior to probe fault; **3**=ON-OFF as prog. C7 and C8 (1)		0	2	3
C7	Time relay ON in case of faulty probe (Page 11): (If C7=0 and C8≠0, the relay will always be OFF deenergised)	(min.)	0	10	120
C8	Time relay OFF in case of fault of probe 1 (Page 11): (If C8=0 y C7≠0, the relay will always be ON energised)	(min.)	0	5	120
C9	Maximum duration of fast freezing mode. (**0**=off) (Pág.10)	(h.)	0	24	48
C10	Change set point (SP) in fast freezing mode, when it reaches this point (SP + C10) returns to normal (SP+C10 ≥ C3) (**0**=OFF) (Page 10) The value of this parameter is always negative, except if it is 0	(ºC/ºF)	0	-50	C3-SP
C11	Length of inactivity at digital input to activate ECO mode (Only if P10 or P11=1) (**0**=OFF) (Page 11)	(h.)	0	2	24
C12	Change set point (SP) in ECO mode (SP+C12 ≤ C2) (**0**=OFF) (Page 11)	(ºC/ºF)	0	2	C2-SP
EP	Exit to Level 1				

(1): (Depending on model)

Nivel 1.- Defrost Control

These parameters are visible only if the unit is in cool mode (P0=0)

Level 2	Description	Values	Min	Def	Max.
d0	Defrost frequency (Time between two starts) (Page12)	(h.)	0	*	96
d1	Maximum defrost duration (**0**=defrost deactivated) (Page13)	(min.)	0	*	255
d2	Type of message during defrost: (Page 13) **0**=Current temperature; **1**=Temperature at start of defrost; **2**=Display dEF message		0	2	2
d3	Maximum duration of message (time added at the end of the defrost) (Page13)	(min.)	0	5	255
d4	Defrost end temperature (probe 2) (If P4 ≠ 1) (Page13)	(ºC/ºF)	-50	8	99,9
d5	Defrost on equipment start-up (Page13): **0**=NO, First defrost as per d0 **1**=YES, First defrost as per d6		0	0	1
d6	Defrost start delay on equipment start-up (Page13)	(min.)	0	0	255
d7	Defrost type: **0**=Resistors, **1**=Inverted cycle (Page12)		0	0	1
d8	Calculated time between defrost period (Page 13): **0**=Total actual time; **1** =Sum of times the compressor is on		0	0	1
d9	Drip time at end of defrost (Page 12) (compressor and fans off) (if P4 ≠ 1)	(min.)	0	1	255
EP	Exit to Level 1				

Nivel 1.- Fan control

Level 2	Description	Values	Min	Def	Max.
F0	Fan shut-down temperature as per probe 2 (if P4 ≠ 1) (Page 15)	(ºC/ºF)	-50	*	99,9
F1	Probe 2 differential (If P4 ≠ 1) (Page 15)	(ºC/ºF)	0,1	2,0	20,0
F2	Stop fans when stopping compressor **0**=No, **1**=Yes (Page 15)		0	1	1
F3	Fan status during defrost: (Page 15) **0**=Off; **1**=On		0	*	1
F4	Starting delay after defrost (if F3=0) (Page 15) Will only operate if it is higher than d9	(min.)	0	3	99
F5	Stop fans on opening the door **0**=No, **1**=Yes (Page 15) (Requires a digital input configured as port P10 or P11=1)		0	0	1
EP	Exit Level 1				

Nivel 1.- Alarm control (visual)

Level 2	Description	Values		Min	Def	Max.
A0	Configuration of temperature alarms (Page 17): **0**=Relative to SP; **1**=Absolute			0	0	1
A1	Maximum alarm probe 1 (must be greater than SP) (Page 17)	(ºC/ºF)	NTC	A2	99.0	99.0
			PTC		-	150
A2	Minimum alarm probe 1 (must be greater than SP) (Page 17)	(min.)		-50.0	-50.0	A1
A3	Temperature alarm delay during start-up (Page 18)	(min.)		0	0	120
A4	Temperature alarm delay after completion of a defrost (Page 18)	(min.)		0	0	99
A5	Temperature alarm delay after reaching the value of A1 or A2 (Page 18)	(min.)	0	30	99	
A6	External alarm / severe external alarm delay when receiving digital input signal (P10 or P11=2 or 3) (Page 18)	(min.)	0	0	120	
A7	Deactivation delay of the external alarm / severe external alarm when the signal of the digital input disappears (P10 or P11=2 or 3) (Page 18)	(min.)	0	0	120	
A8	Show warning if defrost is terminated by time-out **0**=No, **1**=Yes (Page 17)		0	0	1	
A9	Alarm relay polarity **0**= Relay ON in alarm (OFF no alarm); (Page 18) **1**= Relay OFF on alarm (ON with no alarm)		0	0	1	
A10	Temperature Alarm Differential (A1 and A2) (Page 17)	(ºC/ºF)	0,1	1,0	20,0	
A12	Door open alarm delay (if P10 or P11=1) (Page 18)	(min.)	0	2	120	
EP	Exit to Level 1					

Nivel 1.- General status

Level 2	Description	Values	Min	Def	Max.
P0	Type of operation **0**=Direct, Cold;**1**=Inverted, Heat (Page 8)		0	*	1
P1	Delay of all functions on receiving electrical power (Page 9)	(min.)	0	0	255
P2	Access code (password) functions (Page 9) **0**=Inactive; **1**=Block access to parameters; **2**=Keyboard lock		0	0	2
P4	Selection of type of inputs **1**=1 probe (S1+DI1+DI2) **2**=2 probes (S1+S2+DI1+DI2) **3**=3 probes		1	1	4
P5	MODBUS address (Page 22)		1	1	225
P6	Configuration of AUX relay (Page 12 to 17) **1**= 2nd Defrost (1) **2**=Alarm **3**=Light **4**=Pump down (1) **5**=Master Defrost (1)		1	1	5
P7	Temperature display mode (Page 8) **0**=Whole in °C **1**=One decimal in °C **2**=Whole in °F **3**=One decimal in °F		0	1	3
P8	Probe to be displayed (as per parameter P4) (Page 8) **0**=Visualization of all the probes in sequence; **1**=Probe 1; **2**=Probe 2; **3**=Probe 3 (1)		1	1	3
P9	Selection of probe type **0**=NTC; **1**=PTC (Page 8)		0	0	1
P10	Configuring digital input 1 (Page 9) **0**= Off **1**=Door contact **2**=External alarm **3**=Severe external alarm **4**=Slave defrost **5**=Act. ECO mode by pushbutton **6**=Act. Fast Freezing (If C9≠0) **7**= Low pressure switch (1) **8**=Remote defrost		0	0	9
P11	Configuring digital input 2 (Page 9) **0**= Off **1**=Door contact **2**=External alarm **3**=Severe external alarm **4**=Slave defrost **5**=Act. ECO mode by pushbutton **6**=Act. Fast Freezing (If C9≠0) **7**=Not used **8**=Remote defrost **9**=Act. ECO mode by switch		0	0	9
P12	Digital input polarity 1 (Page 9) **0**=Energised on closed contact, **1**=Energised on open contact		0	0	1
P13	Digital input polarity 2 (Page 9) **0**=Energised on closed contact, **1**=Energised on open contact		0	0	1
P14	Maximum start-up time after pump down (Page16) (Values between 1 and 9 seconds are not accepted)	(sec.)	0	0	120
P15	Maximum pump down time (Page16)	(min.)	0	0	15
P22	Cold room light timer (Page15)	(min.)	0	0	999
EP	Exit Level 1				

(1): (Depending on model)

Nivel 1.- Access control and information (tid)

Level 2	Description	Values	Min	Def	Max.
L5	Access code (Password) (Page 9)		0	-	99
PU	Program version (Information)			-	
Pr	Program revision (Information)			-	
EP	Exit Level 1				

8.- Technical specifications

Power supply

AKO-D14602 / D14610 . . . . . 230 V~ ±10% 50/60 Hz 3.5 VA
AKO-D14622 / D14632 / D14642 . . . . . 230 V~ ±10 % 50/60 Hz 3.75 VA
AKO-D14601 / D14612 / D14621 / D14631 / D14641 . . . . 120 V~ +8 % -12% 50/60 Hz 4 VA
AKO- D14622-C / D14632-C / D14642-C . . . . . 90-240 V~ 50/60 Hz 7 VA

Maximum Voltage SELV circuits . . . . . 20 V
Communication (Subject to availability) . . . . . Modbus RTU Rs485
Inputs

AKO-D1460x / D1461x . . . . . 1 NTC/PTC input
AKO-D1462x. . . . . 1 NTC/PTC input + 2 digital inputs
AKO-D1463x / D1464x (According to parameter P4) . . . . . 2 NTC inputs + 2 digital inputs
. . . . . 3 NTC inputs + 1 digital input

COOL Relay 16 A . . . . . (EN60730-1: 12 (9) A 250 V~)
DEF Relay 8 A . . . . . (EN60730-1: 8(4) A 250 V~)
FAN Relay 16 A . . . . . (EN60730-1: 12(9) A 250 V~)
AUX Relay 6 A . . . . . (EN60730-1: 5(4) A 250 V~)
Number of relay operations. . . . . EN60730-1: 100.000 operations
Types of probe . . . . . NTC **AKO-149xx** / PTC **AKO-1558xx**
Measurement range NTC. . . . . -50,0 °C to +99,9 °C (-58,0 °F to 210 °F)
PTC . . . . . -50,0 °C to +150 °C (-58,0 °F to 302 °F)
Resolution -50 to 100 °C . . . . . 0,1 °C
> 100 °C . . . . . 1 °C
Working environment . . . . . -10 to 50 °C, humidity <90 %
Ambient storage humidity. . . . . -30 to 70 °C, humidity <90 %
Class of protection Ip40
Fixation. . . . . .Wall assembly, adaptable to built-in housing
Dimensions . . . . . 171 x 94 x 42 mm
Connections . . . . . Screw terminals for cables up to 2.5 mm²
Rating of control device: built-in, automatic operation feature Type 1.B, for use in clean environments, Class A software and continuous operation. Pollution classification 2 s/ UNE-EN 60730-1.

Double insulation between supply, secondary circuit and relay output.
Rated pulse voltage . . . . . 2500 V
Temperature during ball-pressure test Accessible parts . . . . . 75 °C
Parts which position active elements . . . . . 125 °C

Voltage and current as per EMC tests

AKO-D14602 / D14610 / D14622 / D14622-C / D14632 / D14642 / D14632-C / D14642-C 207 V, 17 mA
AKO-D14601 / D14612 / D14621 / D14631 / D14641 . . . . . 105 V, 36 mA

Current of radio jamming supression tests . . . . . 270 mA

8.1- Dimensions

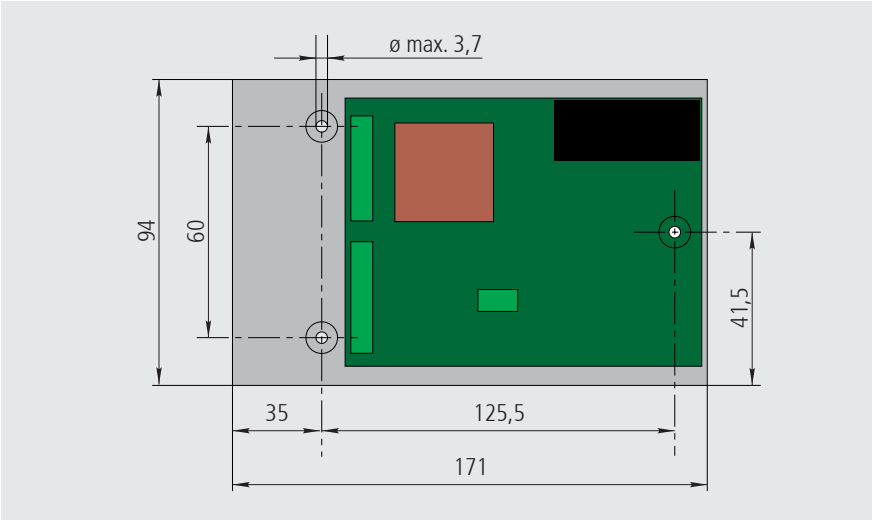

8.2- Installation

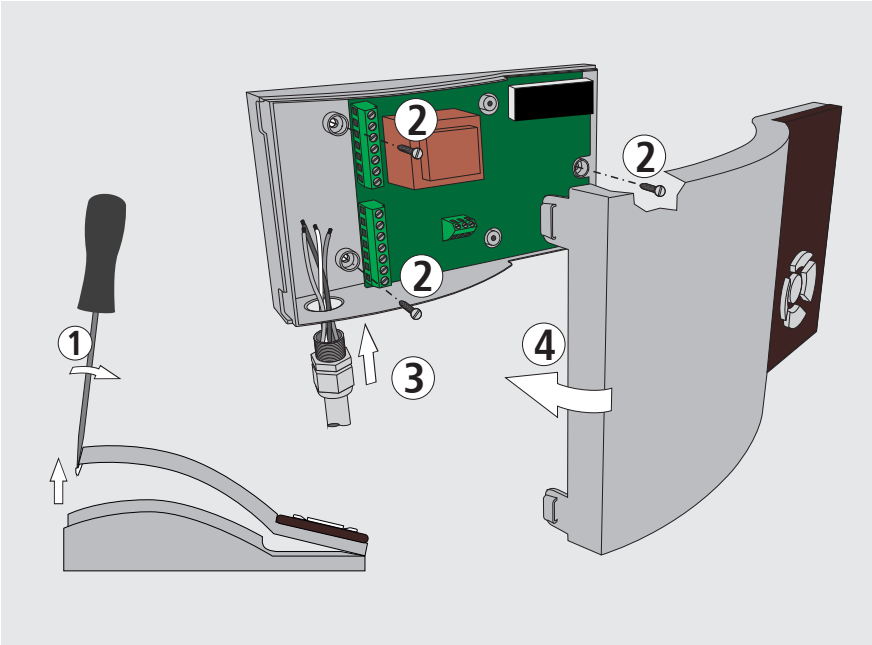

8.3- Accesories

The **AKO-D14918** programming key allows you to quickly and easily copy configured settings from one controller to another with the same functionality

Thermostats and controllers with 2 to 4 relays.

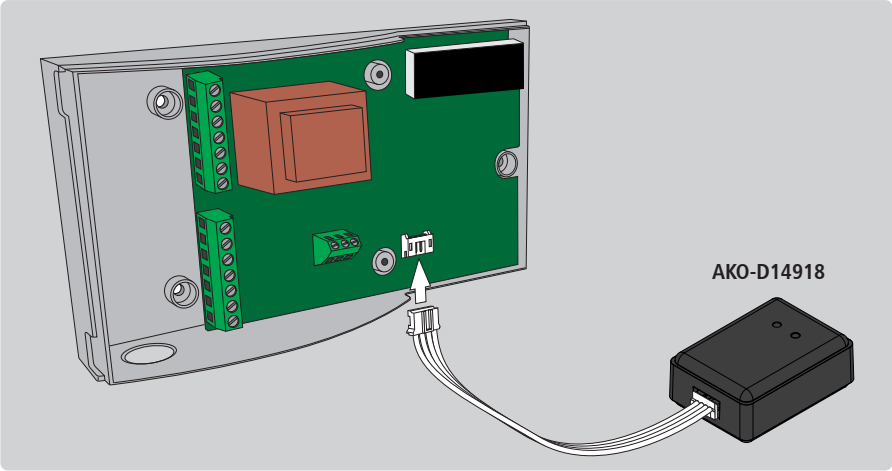

Thermometers and thermostats with 0 to 1 relay.

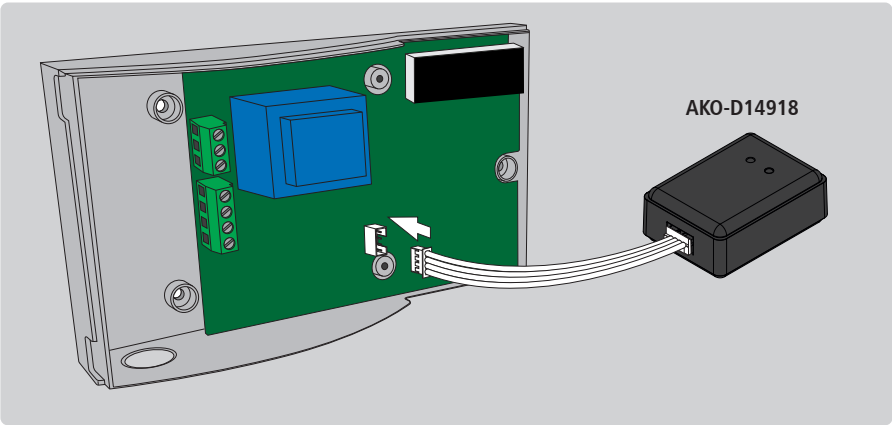

AKO ELECTROMECÁNICA , S.A.
Avda. Roquetes, 30-38
08812 • Sant Pere de Ribes.
Barcelona • Spain.

www.ako.com

35D146002 REV.03 2026

We reserve the right to supply materials that might vary slightly to those described in our Technical Sheets. Updated information is available on our website.