COMPLETE 45° HORIZONTAL CURVE

45° horizontal curve for the twin-rail overhead conveyor system

TWIN-RAIL | MEAT INDUSTRY | CURVE | SLAUGHTERHOUSES

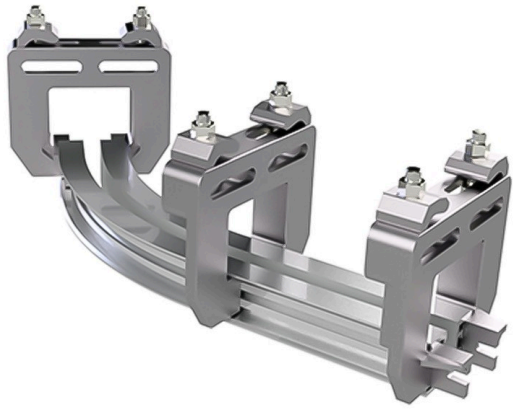

DESCRIPTION

45° horizontal curve designed to be integrated into the Bernad® twin-rail overhead conveyor system, building the route each meat transport installation requires in slaughterhouses and cutting rooms.

Supplied complete: includes rail brackets with anchor clamps and stainless steel fasteners, ready to mount on the supporting structure.

CONSTRUCTION AND STANDARD EQUIPMENT

- 45° horizontal change of direction
- Includes rail brackets with anchor clamps
- Stainless steel fasteners

KEY DATA					
Type	**Horizontal**	Angle	**45°**	Includes	**Brackets+clamps**

MODELS AND DIMENSIONS

REF.	CONFIGURATION	ANGLE	SUITABLE FOR
245000085	Horizontal curve	**45°**	Twin-rail network

Custom manufacturing on request. Compatible with the Bernad twin-rail overhead conveyor system.

APPLICATIONS

Slaughterhouses, cutting rooms and cold rooms in meat plants with twin-rail overhead conveyors.

For information only. Specifications, dimensions and finishes may change without notice due to product improvements. The image is indicative. Please request a quotation to confirm dimensions, materials and lead times.

José Bernad, S.L.
Parque Empresarial Campollano, Avda. Adeca 17 — 02007 Albacete (España)
www.josebernad.com
T: +34 967 219 649